INSTALLATION & USER'S MANUAL

175W - 1100W SINGLE PHASE

CEPS-M

EMERGENCY LIGHTING CENTRAL INVERTER

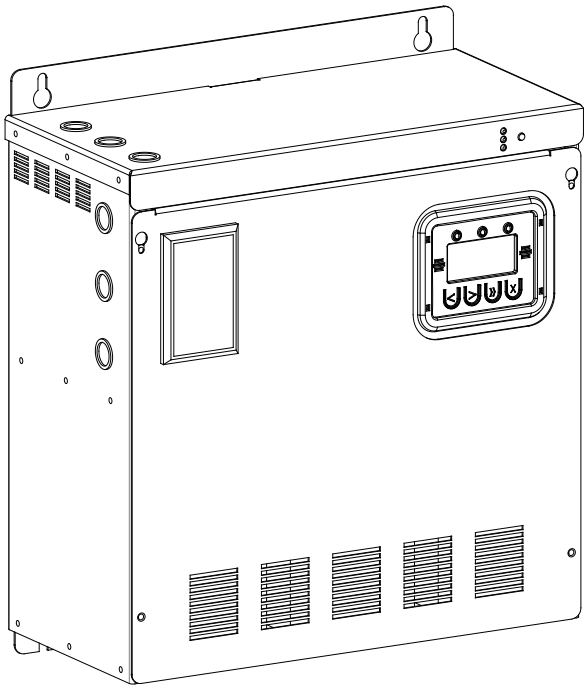

This unit contains LETHAL VOLTAGES. All repairs and service should be performed by AUTHORIZED SERVICE PERSONNEL ONLY! There are NO USER SERVICEABLE PARTS inside this unit.

IMPORTANT SAFEGUARDS

When using electrical equipment, you should always follow basic safety precautions, including the following:

1. **READ AND FOLLOW ALL SAFETY INSTRUCTIONS.**
2. **Do not install the system outdoors.**
3. **Do not install near gas or electric heaters or in other high-temperature locations.**
4. **Use caution when servicing batteries. Depending on battery type, batteries contain either acid or alkali and can cause burns to skin and eyes. If battery fluid is spilled on skin or in the eyes, flush with fresh water and contact a physician immediately.**
5. **Equipment should be mounted in locations where it will not be subjected to tampering by unauthorized personnel.**
6. **The use of accessory equipment not recommended by Manufacturer may cause an unsafe condition and void the warranty.**
7. **Do not use this equipment for other than its intended use.**
8. **Qualified service personnel must perform all servicing of this equipment.**

SAVE THESE INSTRUCTIONS

The installation and use of this product must comply with all national, federal, state, municipal, or local codes that apply. If you need help, please call Service. 1-800-982-4587

C A U T I O N

READ ENTIRE MANUAL AND REVIEW ALL DOCUMENTATION BEFORE ATTEMPTING SYSTEM INSTALLATION!

FOR SERVICE or INSTALLATION INFORMATION
TELEPHONE: (800)-982-4587

FOR YOUR PROTECTION....
PLEASE COMPLETE AND RETURN WARRANTY REGISTRATION CARD IMMEDIATELY.

CAUTION

Do not drill the cabinet; drilling cabinet will void factory warranty; drill filings may damage the unit and keep it from operating. If you need larger knockouts, use a chassis punch to punch out the appropriate knockout.

TABLE OF CONTENTS

Page(s)

SECTION 1
Safety Warning…….…5
Battery Storage

SECTION 2
Introduction……..……6-7

SECTION 3
Before installing the system…..……...……8-13
System Dimensions and Weights
Location Guidelines
Storage and operating Environment
T-Grid Installation
Installation Overview

SECTION 4
AC input & AC output Installation……..……14-21
Switched Wiring

SECTION 5
Installing batteries and DC wiring…….……....22-33
Safety instructions
Before installing the batteries
Installing and connecting the batteries
Extended Run Time vs. Output Power
Battery Wiring Diagrams
Replacing the batteries

SECTION 6
Startup and shutdown procedure……..…….…….…..…35-37

SECTION 7
Operation…….…….…….……38-39
Summary Alarm Dry Contacts
Time Delay Circuit
Load Reduction Fault

SECTION 8
Specifications……..……..……40

SECTION 9
Maintenance and service…..…..…….……41-42
Trouble shooting chart

SECTION 10
Warranty……..……..……..…..……..43-47
Removing Inverter Chassis

SECTION 1

SAFETY WARNINGS

Read the following precautions before you install this emergency lighting system.

IMPORTANT SAFETY INSTRUCTIONS

SAVE THESE INSTRUCTIONS. This manual contains important instructions that you should follow during installation and maintenance of the system and batteries. Please read all instructions before operating the equipment and save this manual for future reference.

DANGER

This system contains **LETHAL VOLTAGES**. AUTHORIZED SERVICE PERSONNEL should perform all repairs and service **ONLY**. There is **NO USER SERVICEABLE PARTS** inside the Emergency lighting power supply.

WARNING

- Do not install the system outdoors.
- Do not install near gas or electric heaters or in other high-temperature locations.
- Use caution when servicing batteries. Battery acid can cause burns to skin and eyes. If acid is spilled on skin or in the eyes, flush with fresh water and contact a physician immediately.
- Equipment should be mounted in locations where it is not readily subjected to tampering by unauthorized personnel.
- The use of accessory equipment not recommended by the manufacturer may cause an unsafe condition.
- Do not use this equipment for other than intended use.
- Only qualified service personnel (such as a licensed electrician) should perform the system and battery installation and initial startup. Risk of electrical shock.

BATTERY STORAGE

This shipment contains rechargeable, maintenance free batteries. They must be stored properly to assure proper operation upon installation. Therefore, please follow the following guidelines when storing batteries:

- Store in clean, dry and cool location. While it is safe to store batteries in environments of -18 to 40 degrees C (0 to 104 degrees F), it is recommended that you do not store at temperatures above 30 degrees C (86 degrees F). The warmer the ambient temperature, the higher the self discharge rate of the battery. This will require more frequent recharge of the individual batteries until they are placed in service.
- Avoid storing in direct sunlight or in front of or near heaters, heat duct or other sources of heat.
- Do not store directly on concrete structures. Always store on wooden pallets or metal shelves near floor level.
- Place the batteries in service within 180 days of receipt. If you cannot place the batteries in service within the 180 days, then the batteries must be recharged every 180 days, (more frequently if stored at elevated temperatures) while in storage. Failure to do so will void the warranty and may cause irreversible damage to the battery.

SECTION 2

INTRODUCTION

Keep this Manual.

This unit is a microprocessor controlled PWM (Pulse Width Modulated) pure sine wave based DC to AC power inverter utilizing MOSFET technology. It integrates a fully automatic 3-rate battery charger, a relay transfer system, control circuitry and maintenance free sealed lead calcium type batteries. Additional options that include digital meter display, additional metering, input and output I/O contact board, and a data collection system make it the most versatile emergency lighting inverter on the market. The system components are carefully matched to make the unit a completely self-contained, fully automatic standby power source for operation on lighting loads. The batteries are sized and tested per UL-924 and Life Safety Code ANSI / NFPA 101, providing emergency power for a minimum of 90 minutes.

If the duration of a power failure is greater than the batteries storage capability, the inverter will automatically shut down when the battery voltage reaches 85% of the nominal DC voltage. This feature protects the battery from being permanently damaged from a deep discharge that could cause cell reversal. This battery protection feature is called "Low Voltage Disconnect" or L.V.D.

When the AC power is restored after a full discharge, the system will be ready for another power failure within 24hrs. If another power failure occurs after the batteries are charged to approximately 80% but before the 24-hour recharge time, the run time will be decreased.

The optional front panel display incorporates an OLED display and a 4-button keypad. All user interface functions are available from the front panel assembly.

HOW TO USE THIS MANUAL

This manual tells you how to install, start and operate your unit and lets you know how to get more information for special situations.
Please record your unit's part number, serial number, and model number below. You can find these numbers on the Unit Information label on the backside of the cabinet panel.

Part Number _____

Serial Number _____

Model Number _____

Record Keeping

An on-site permanent log of the inspection, testing, and maintenance of the emergency electrical power supply system shall be maintained in accordance with this manual. The log shall include:

The date on which the inspection, testing, and maintenance exercise was carried out.

The name of the person(s) who performed the inspection, testing, and maintenance.

A note of any unsatisfactory condition observed or discovered, and the steps taken to correct the condition.

Service and Support

We are committed to outstanding customer service. A service technician is available **24** hours a day, **365** days a year. Service is also available **24** hours a day to give you access to technical notes and product information.

NOTE: Please have your unit's Serial and Part numbers available when you call; this number is located on the backside of the cabinet panel.

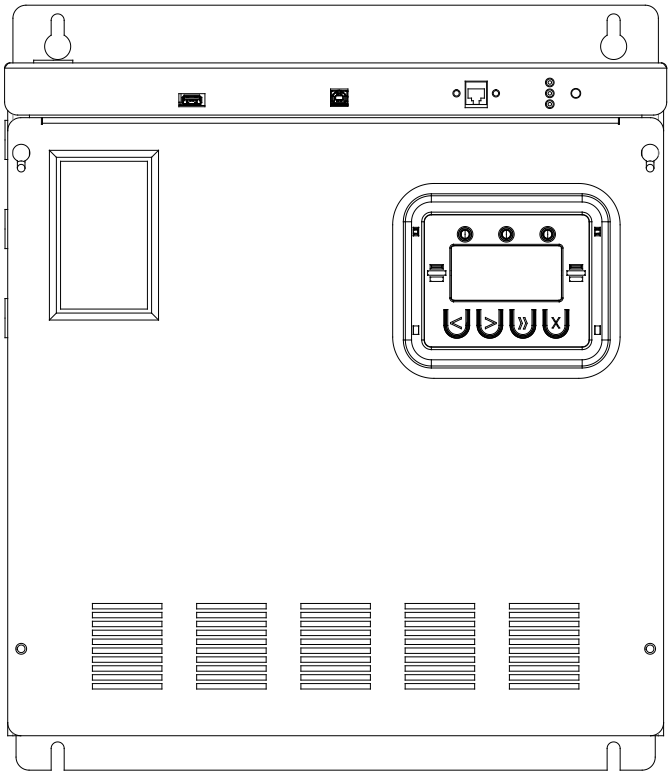

(Shown with additional options)

SECTION 3

BEFORE INSTALLING THE SYSTEM

System Dimensions and Weights

Required Clearance
Top – 6” (15.24 cm)
Sides – 2” (5.1 cm)
Front – 12” (30.5 cm)

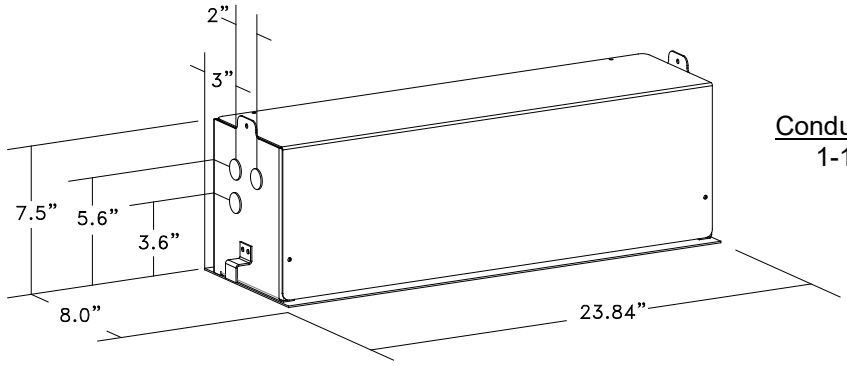

Conduit Knockout Size
1-1/8” (2.86 cm)

Figure 3.1 175W (T-Grid Style) System Dimensions

Required Clearance
Top – 6” (15.24 cm)
Sides – 2” (5.1 cm)
Front – 36” (91.4 cm)

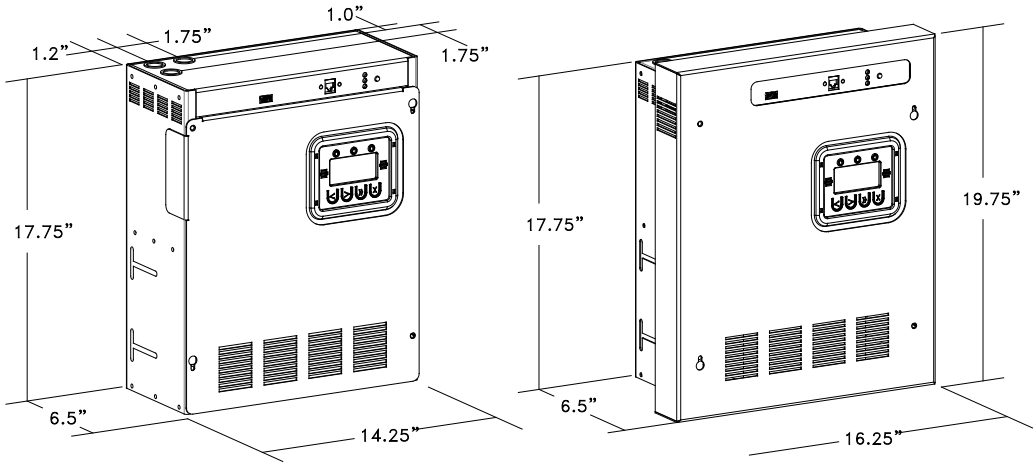

(Surface Mount Style)

Conduit Knockout Size
7/8” (1.59 cm) / 1-1/8” (2.86 cm)

(Recess Mount Style)

(Conduit Knockout placements are the same as the Surface Mount Style)

Figure 3.2 175W System Dimensions (Shown with additional options)

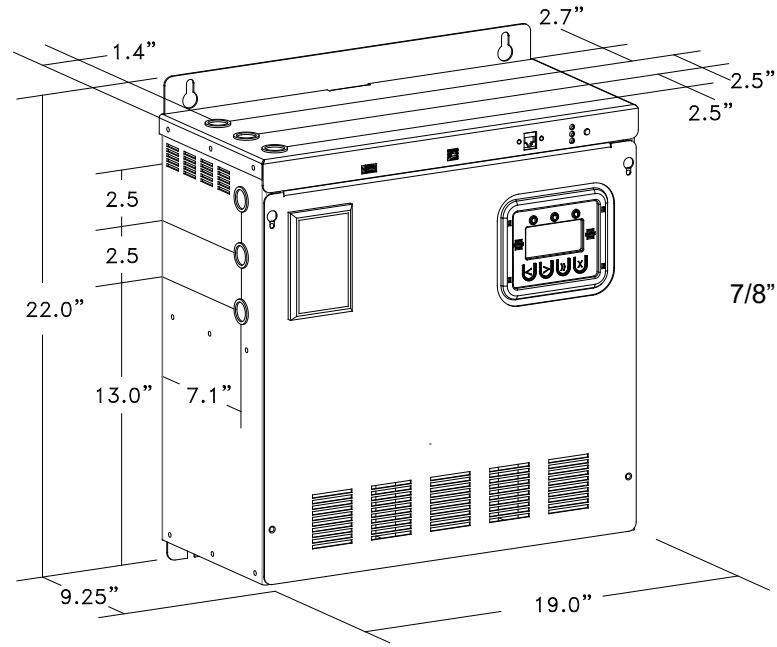

Required Clearance
Top – 6” (15.24 cm)
Sides – 2” (5.1 cm)
Front – 36” (91.4 cm)

Conduit Knockout Size
7/8” (1.59 cm) / 1-1/8” (2.86 cm)

Figure 3.3 350, 499 & 550W System Dimensions (Shown with additional options)

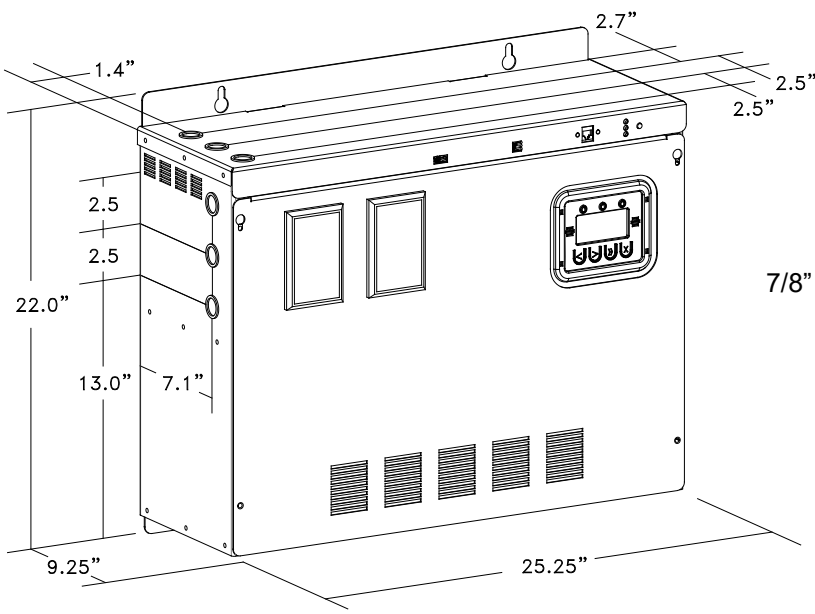

Required Clearance
Top – 6” (15.24 cm)
Sides – 2” (5.1 cm)
Front – 36” (91.4 cm)

Conduit Knockout Size
7/8” (1.59 cm) / 1-1/8” (2.86 cm)

Figure 3.4 750W System Dimensions (Shown with additional options)

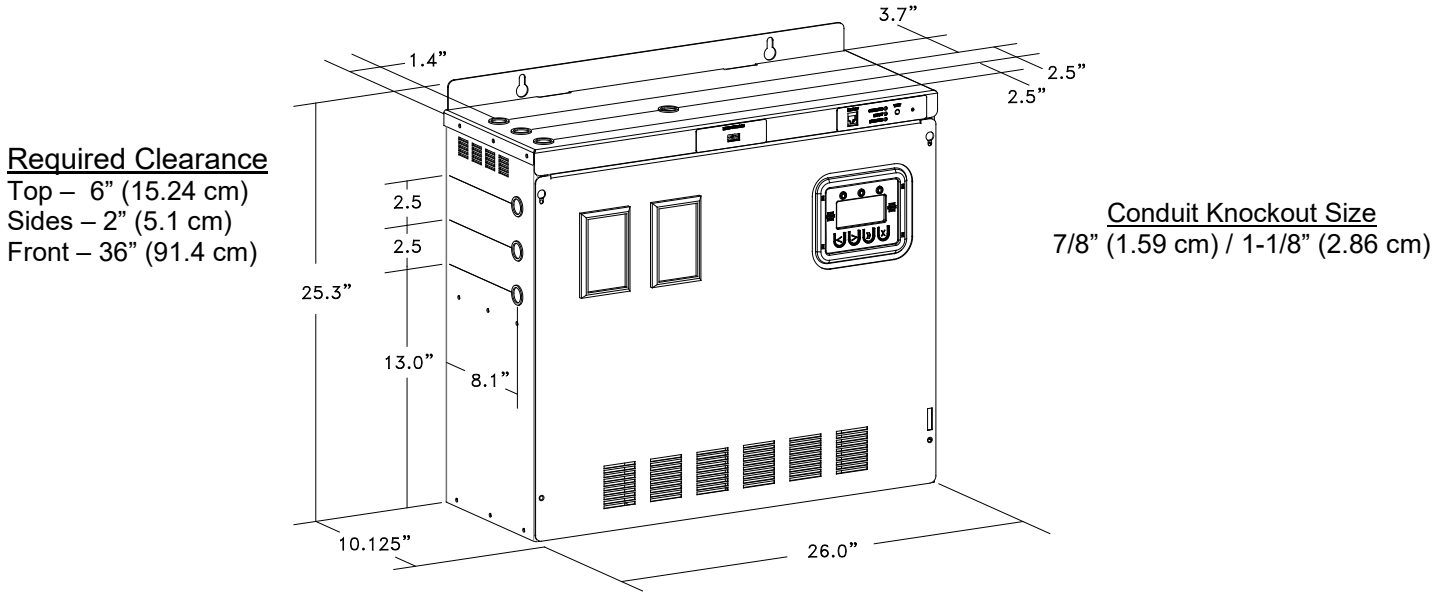

Figure 3.5 1100W System Dimensions (Shown with additional options)

Table 3.1 System weight [in lbs. (kg)]

	175W	350W	499W	550W	750W	1100W
Inverter Cabinet	30 (13.6)	50 (22.7)	55 (25.0)	55 (25.0)	80 (36.3)	87 (39.5)
Batteries	25 (11.4)	50 (22.7)	75 (34.0)	75 (34.0)	100 (45.4)	159 (72.0)
System Total	55 (25.0)	100 (45.4)	130 (59.0)	130 (59.0)	180 (81.7)	246 (111.5)

Location Guidelines

Keep the following guidelines in mind when choosing the location for your system and batteries:

- Verify that the environment meets the requirements in “Storage and Operating Environment” below. The environment can affect the reliability and performance of both the unit and the batteries.
- Choose a permanent location for the unit.
- Refer to Table 3.1 when you choose a site to make sure that the area can support the weight of the system, the batteries, and any other necessary equipment.
- If the room is equipped with a sprinkler system, the unit must be provided with sprinkler-proof drip cover. The cover shall be securely mounted 12”-24” above top of the unit and centered so that the unit lies fully within the coverage area of the drip cover.
- The system should be connected to the emergency generator, if available.

Receiving and Moving the Unit and the Batteries

Systems weights vary, (see Table 3.1; ask your sales representative for additional information). Make sure you are prepared for these weights before you unload or move the unit or the batteries. Do not install any batteries until you have permanently installed the unit and connected all conduit and wiring.

Storage and Operating Environment

Make sure you store and install the system in a clean, cool, dry place with normal ventilation and level floors.

Storage Temperature

Store the batteries (in the system) at -18 to 40°C (0 to 104°F). Batteries have a longer shelf life if they are stored below 25°C (77°F). Keep stored batteries fully charged. Recharge the batteries every 90–180 days. The system without batteries may be stored at -20 to 70°C (-4 to 158°F).

Ventilation

The air around the unit must be clean, dust-free, and free of corrosive chemicals or other contaminants. Do not place the system or batteries in a sealed room or container.

Operating Temperature

System can operate from 20° to 30°C (68° to 86°F) and up to 95% relative humidity. The batteries' service life is longer if the operating temperature stays below 25°C (77°F).

High Altitude Operation

Maximum elevation for operation is 3000m (10,000 ft) above sea level.

Site Locations with Extreme Power Surges

Sites where there are high input spikes; greater than UL924 specification (L-N, L-G & N-G >3KV @ multiple pulses and >6KV @ a single pulse) may require an optional external surge protection filter.

Mule Controls part number (LV-FILTER).

Batteries

The temperature should be near 25°C (77°F) for optimum battery performance. Batteries are less efficient at temperatures below 18°C (65°F), and high temperatures reduce battery life. Typically, at about 35°C (95°F), battery life is half of what it would be at a normal temperature of 25°C (77°F). At about 45°C (113°F), battery life is one-fourth of normal.

Make sure that heaters, sunlight, air conditioners, or outside air vents are not directed toward the batteries. These conditions can make the temperature within battery strings vary, which can cause differences in the batteries' voltages. Eventually, these conditions affect battery performance.

Do not allow tobacco smoking, sparks, or flames in the system location because hydrogen is concentrated under the vent cap of each cell of the battery. Hydrogen is highly explosive, and it is hard to detect because it is colorless, odorless, and lighter than air.

Every type of battery can produce hydrogen gas, even sealed maintenance-free batteries. The gas is vented through the vent caps and into the air, mainly when the unit is charging the batteries. The batteries produce the most hydrogen when maximum voltage is present in fully charged batteries; the batteries do not produce hydrogen during float charging. The amount of current that the charger supplies to the batteries (not the battery ampere-hour) determines how much hydrogen is produced.

T-GRID INSTALLATION

CAUTION: Before installing, make certain the A.C. power is off.

NOTE: The battery is shipped inside the unit.

1) Remove the cover from the T-Grid unit.

2) Disconnect the wires going to the battery and remove the battery retaining bracket.

3) Remove the battery and place it in a location away from the work area to avoid damage until it is ready to be installed.

4) Remove the ceiling tile in the desired installation location.

5) Place the T-Grid unit across the 24" T-bars of the ceiling grid. Support the unit with wires attached to the building steel framing. Hanging ears are provided at the top of the T-Grid unit for support connections. NOTE: DO NOT rely on the inverted T-bar structure to support the unit.

6) Connect the conduits containing the AC supply and the remote fixture leads to the knock-outs provided in the T-Grid unit. (Plenum knock-out gaskets are supplied with the unit)

7) Reinstall the battery and the battery retaining bracket. Connect the input and the output wires to the T-Grid unit. Reconnect the battery wires. NOTE: The battery MUST be secured in the T-Grid unit. DO NOT leave the battery loose or unsecured within the unit.

8) Refer to the startup procedure, and then secure the cover on the T-Grid unit.

9) After installation is complete, replace properly-sized tile into the ceiling grid. The tile should rest on the flange of the T-Grid unit.

Installation Overview

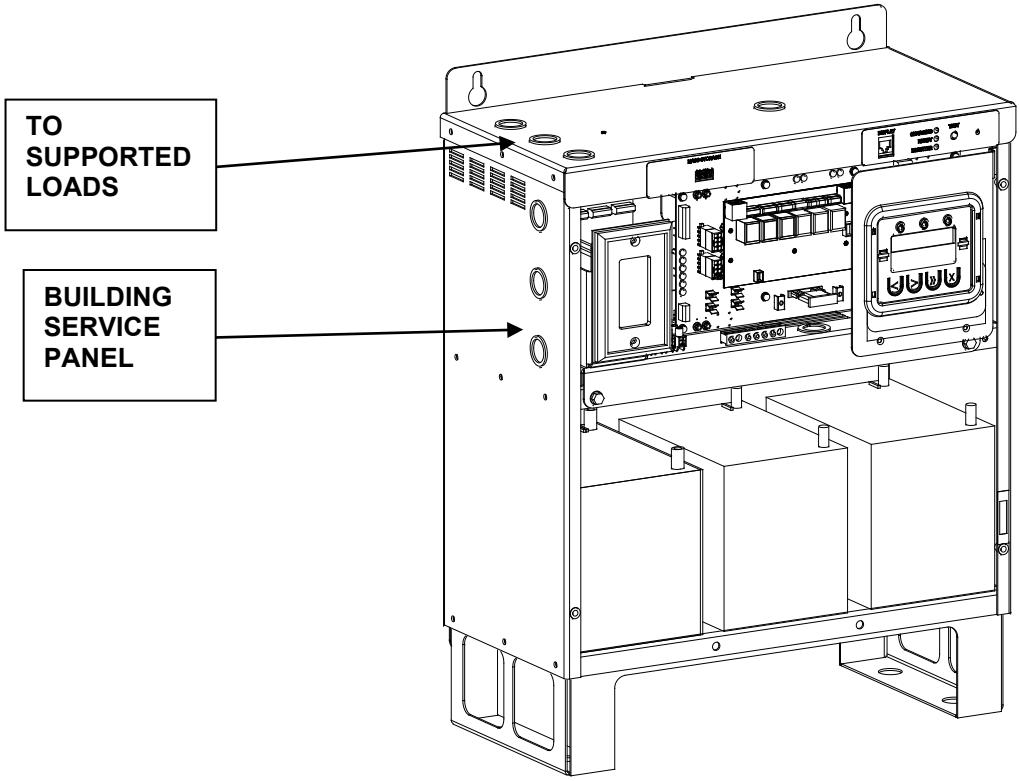

Figure 3.6 Typical Hardwire Installation (Shown with additional options)

350, 499, 550, 750

A = 20.94”
B = 16.0”

1100

A = 24.25”
B = 16.0”

175

C = 4.5”
D = 10.0”

*** ¼ Hardware**

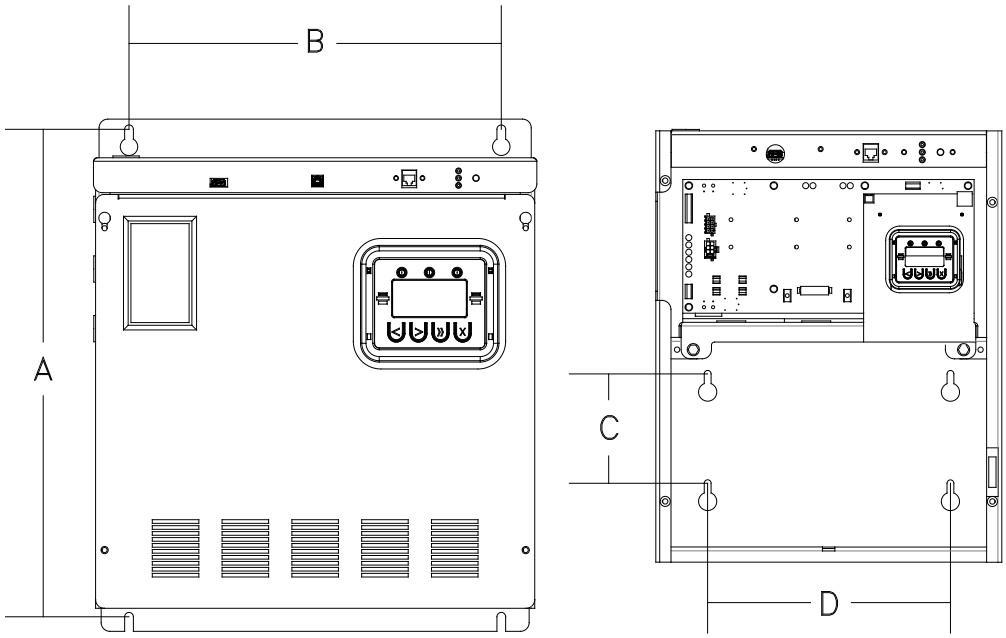

Figure 3.7 Mounting Dimensions (Shown with additional options)

SECTION 4

AC INPUT & AC OUTPUT INSTALLATION

WARNING

Only qualified service personnel (such as a licensed electrician) should perform the AC installation. Risk of electrical shock.

Read the following cautions before you continue.

CAUTION

- Unit contains hazardous AC and DC voltages. Because of these voltages, a qualified electrician must install the system, AC line service, and batteries. The electrician must install the AC line service according to local and national codes and must be familiar with batteries and battery installation.
- Before you install, maintain, or service the unit, always remove or shut off all sources of AC and DC power. You must disconnect AC line input at the service panel and remove the Battery Fuse to make sure the unit does not supply output voltage. Open all output circuit breakers if the unit was equipped with optional output circuit breakers.
- Whenever AC and/or DC voltage is applied, there is AC voltage inside the unit; this is because the unit can supply power from AC line or from its batteries. To avoid equipment damage or personal injury, always assume that there may be voltage inside the unit.
- Remove rings, watches, and other jewelry before installing the AC wiring. Always wear protective clothing and eye protection and use insulated tools when working near batteries. Whenever you are servicing an energized unit with the door open, electric shock is possible; follow all local safety codes. TEST BEFORE TOUCHING!

1. Remove the cabinets' front panel. Make sure the Main AC Input Circuit Breaker is open, the Battery Fuse is removed and any optional output circuit breakers are open inside the unit.
2. Look at the ID label on the inside of the front cover. Write down the following information:

   Input Voltage: _____
   Output Voltage: _____

   Note: Refer to Section 6; steps 2 and 3 for setting up system voltage.
3. Now, make sure the input and output voltages are what you need.
   - Does the input voltage available for the system at the AC service panel match the input voltage shown on the unit's ID label?

     Service Panel Voltage = _____ Input Voltage ___Yes /___No
   - Does the output voltage on the ID label match the voltage for your loads (protected equipment)?

     Load Voltage = _____ Output Voltage ___Yes/___No

     If you answered NO to either of the preceding questions, call SERVICE.
4. Now, use the information you wrote down in Step 2 to find the correct circuit breaker for the service panel that is for your system.

Table 4.1 Recommended Circuit Breaker for Maximum Input Current

System	Input Voltage (Vac)	Max. Current	Recommended Circuit Breaker
175W	120V	2 amps	5A, 1-Pole
175W	277V	1 amp	5A, 1-Pole
350W	120V	4.5 amps	10A, 1-Pole
350W	277V	2 amps	5A, 1-Pole
499W	120V	6.4 amps	10A, 1-Pole
499W	277V	2.8 amps	5A, 1-Pole
550W	120V	7 amps	10A, 1-Pole
550W	277V	3.1 amps	5A, 1-Pole
750W	120V	10 amps	15A, 1-Pole
750W	277V	4.4 amps	10A, 1-Pole
1100W	120V	11.9 amps	20A, 1-Pole
1100W	277V	5.4 amps	10A, 1-Pole

**** WARNING: The external Input Circuit Breaker protecting the system must be a "Motor Start", Delayed Trip Type. This is due to the magnetic inrush current drawn during application of AC Power. Exceeding a 15-Amp circuit breaker can damage the system.**

5. Write down the circuit breaker value that applies to your system from Table 4.1: _____
6. Now, refer to Table 4.2 and use the notes to find the proper gauge wire for the recommended circuit breaker recorded in step 5.

Table 4.2 Recommended Wire Sizes

Read These Important Notes!	For this Input Circuit Breaker Size...	Use this Size 90°C Copper Wire	
		AWG	mm^2
This table lists the AWG and mm2 wire size for each circuit breaker size. The minimum recommended circuit breaker sizes for each model and voltage application are listed in Table 4.1. The temperature rating of conductor must not be less than 90° C wire. Based on the ampacities given in Tables 310-16 of the National Electrical Code, ANSI/NFPA 70-1993 and NEC article 220. Circuit conductors, must be the same size (ampacity) wires and equipment-grounding conductors must meet Table 250-95 of the National Electrical Code. Code may require a larger wire size than shown in this table because of temperature, number of conductors in the conduit, or long service runs. Follow local code requirements.	5, 10, 15	14	2.08
	20	12	3.31

7. The input circuit breaker in the customer provided service panel provides the means for disconnecting AC to the unit. Only authorized persons shall be able to disconnect AC to the unit [see NEC 700-20]. If you are using the input circuit breaker to disconnect AC, you must make sure that only authorized persons have control of the circuit breaker panel to meet the requirements of NEC 700-20.

CAUTION

To prevent the possibility of electrical shock or damage to personnel or the equipment, the Battery Fuse must be removed and circuit breaker at the input service panel must be turned off.

8. Install the conduit. You must run the AC input service conductors and AC output conductors through separate conduits. Emergency output conductors and non-emergency output conductors must also be run through separate conduits. Emergency output circuits shall be installed in dedicated conduit systems and not shared with other electrical circuits as described in NEC 700-9(b). Branch circuits for Emergency Power or Lighting are restricted from being part of a multi wire branch circuit as described in NEC 700-19.

Failure to comply with NEC 700-9(b) and NEC 700-19 will void factory warranty.

The next step explains where to make the AC connections to the system.

INSTALLING AC INPUT WIRES:

Connect AC utility from the service panel circuit breaker to the system.
Connect feed hot wire to the Input Terminal Block labeled **"LINE"**, connect the feed neutral wire to the Input Terminal Block labeled **"NEU"** and connect the ground wire to the ground terminal block labeled **"GND"**.

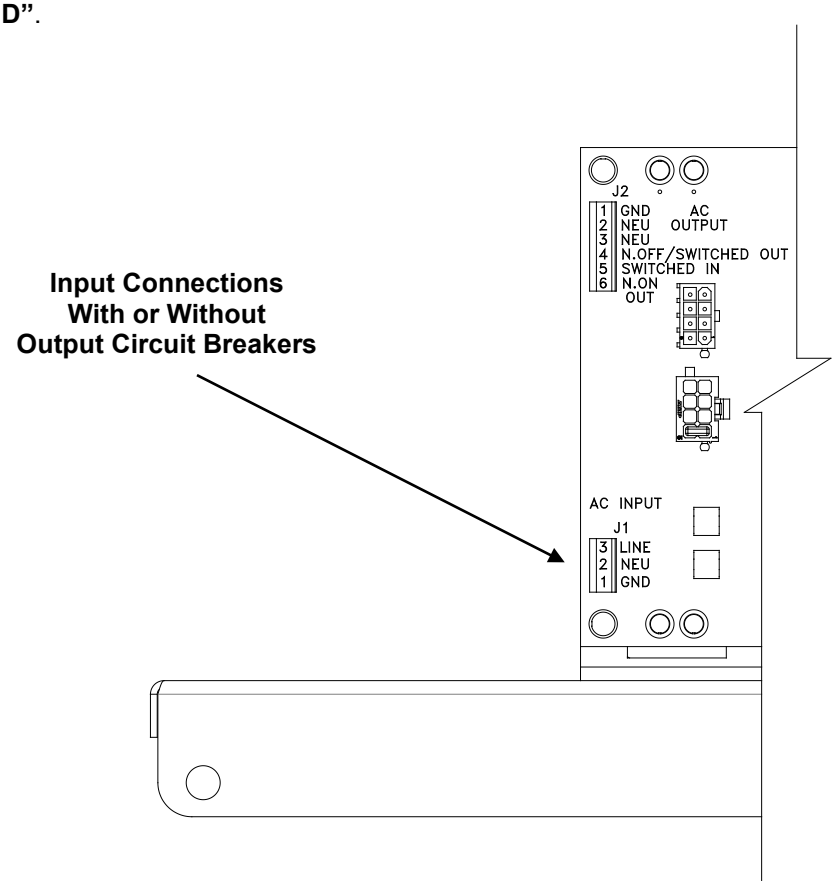

Figure 4.1 AC Input connections

OUTPUT TYPES:

Normally On Output (N.ON OUTPUT): Provides Power to the output load during utility present, utility failures, and test modes.

Normally Off Output (N.OFF/SWITCHED OUT): Output is dedicated for emergency-only equipment which operates only during utility failure and test modes.

Switched Input (SWITCHED IN): Apply a source to this input to convert the **Normally Off Output** to a **Switched Output.** This source can be controlled by wall switches, dimmers, photo eyes, etc.
Note: A source applied to the **"SWITCHED IN"** terminal will power the **"N.OFF/SWITCHED OUT"** if the utility is present. During utility failures and test modes the **"N.OFF/SWITCHED OUT"** will be powered from the battery.

WARNING

The utility AC to the Wall Switch or the Dimmer Panel MUST be the same voltage, the same phase and the same common neutral that is connected to the "LV" system.

INSTALLING NORMALLY ON (N.ON) AC OUTPUT WIRES WITHOUT OCB's:

(See I/O Manual for other connections if required)

Connect load wires to the system's area labeled **"AC OUTPUT"**. Connect the load hot wire to the terminal block labeled **"N.ON OUT"**. Connect the load neutral wire to either **"NEU"** terminal connection. Connect the ground wire to the **"GND"** terminal provided.

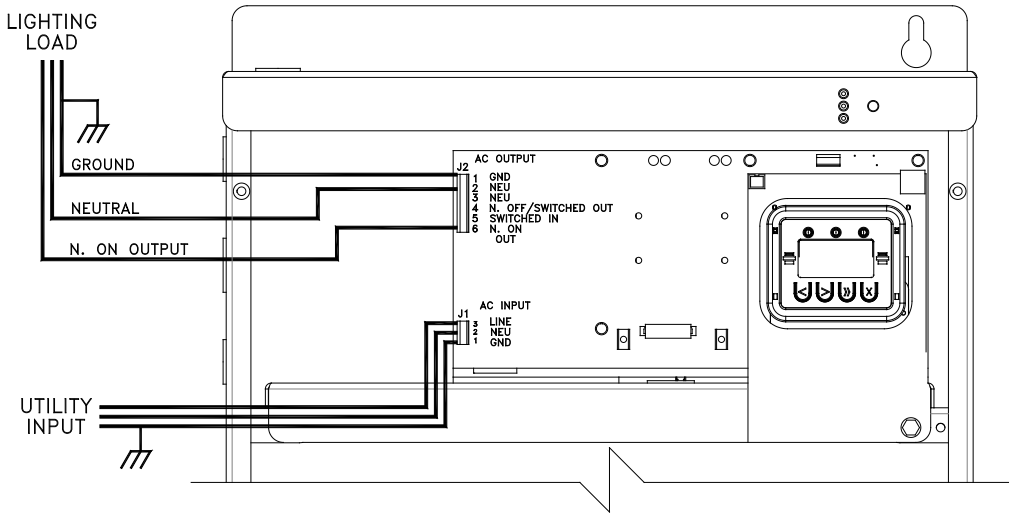

Figure 4.2

INSTALLING NORMALLY OFF (N.OFF) AC OUTPUT WIRES WITHOUT OCB's:

(See I/O Manual for other connections if required)

Connect load wires to the system's area labeled **"AC OUTPUT"**. Connect the load hot wire to the terminal block labeled **"N.OFF/SWITCHED OUT"**. Connect the load neutral wire to either **"NEU"** terminal connection. Connect the ground wire to the **"GND"** terminal provided.

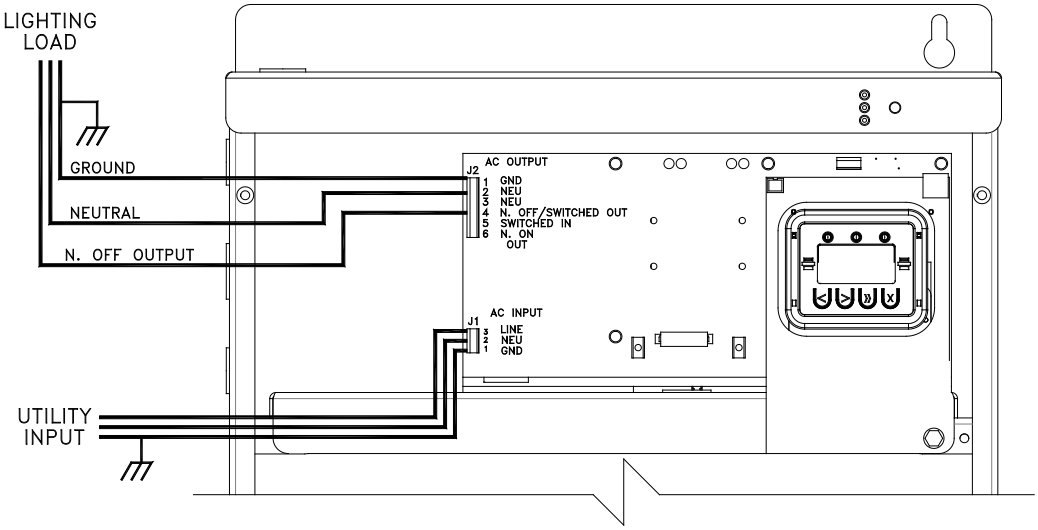

Figure 4.3

INSTALLING SWITCHED INPUT (SWITCHED IN) & SWITCHED OUT (SWITCHED OUT) WIRES WITHOUT OCB's:

(See I/O Manual for other connections if required)

Connect wires to the system's area labeled **"AC OUTPUT"**. Connect the load hot wire to the terminal block labeled **"N.OFF/SWITCHED OUT"**. Connect the switch device hot lead to the **"SWITCHED IN"** terminal of the output terminal block. Connect the output load neutral and the switch device neutral wires to the two **"NEU"** terminal connection points. Connect the ground wire to the one **"GND"** terminal provided.

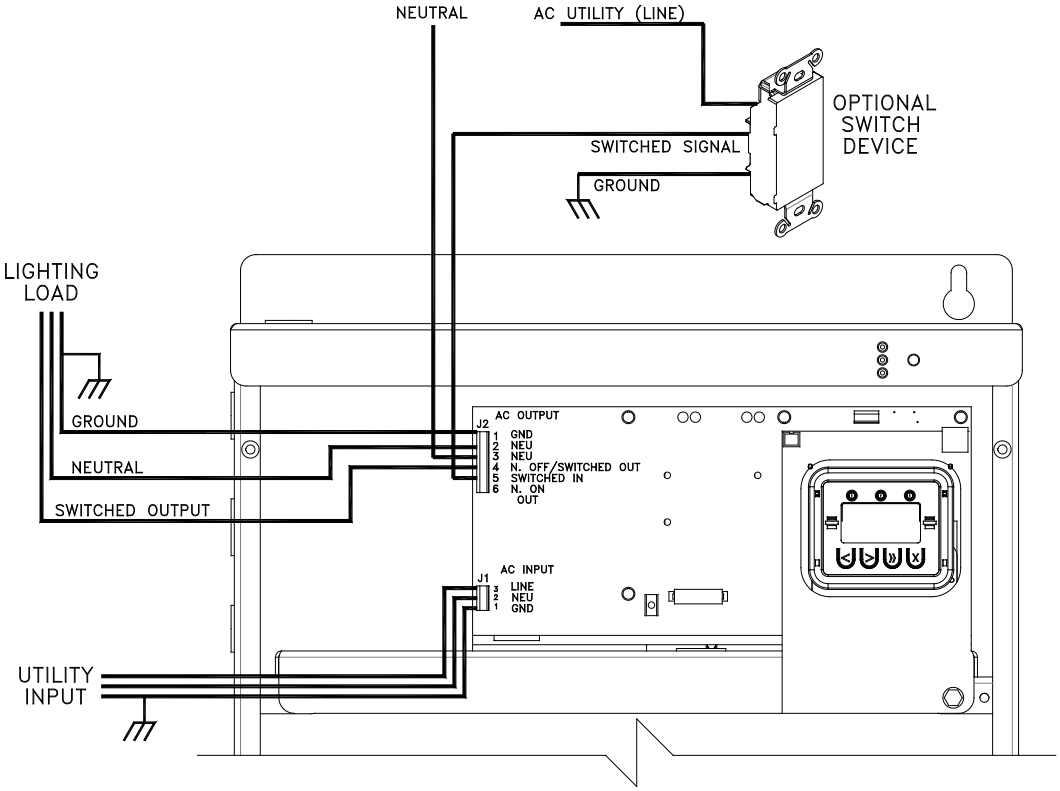

Figure 4.4

INSTALLING NORMALLY ON AC OUTPUT WIRES WITH OCB's:

(See I/O Manual for other connections if required)

Connect load wires to the system's Output Circuit Breaker Board Terminal Block. Connect the load hot wire to the terminal block labeled **"L"**. Connect the load neutral wire to the **"N"** terminal connection. Connect the ground wire to the **"G"** terminal provided.

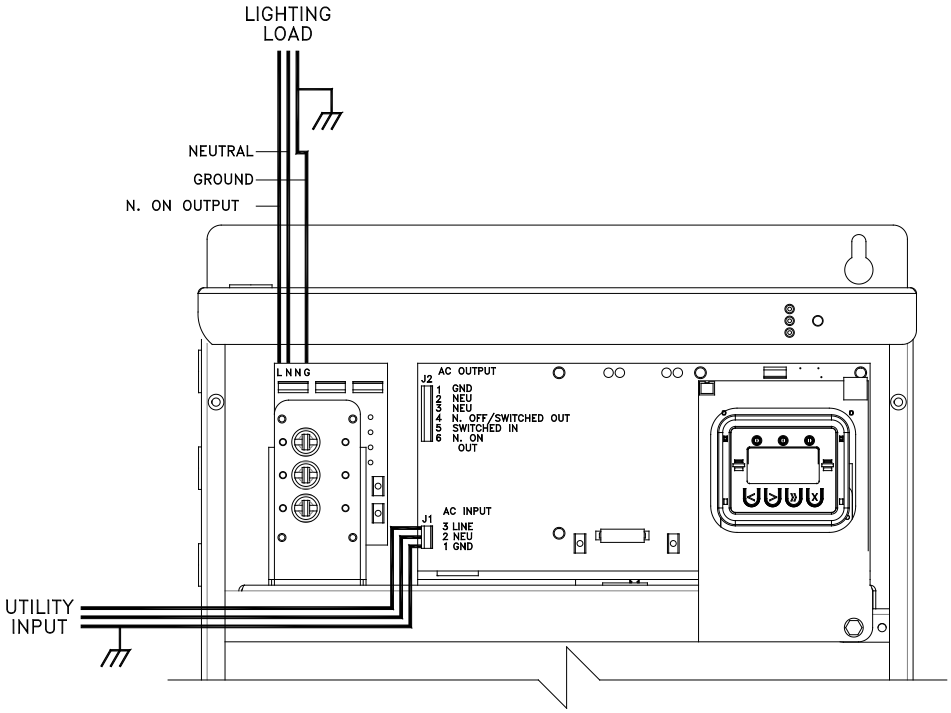

Figure 4.5

Output Circuit Breaker Connections:

CB1 Connections are to the left terminal block.
CB2 Connections are to the middle terminal block.
CB3 Connections are to the right terminal block.

CEPS-750, CEPS-1100: Maximum of 6 OCB's.
2 Rows of 3 OCB's

OCB Information:

OCB Configuration is Field Changeable.

Move OCB Wire to either N/ON or N/OFF Terminal.

Brown Wire goes to CB1.
Violet Wire goes to CB2.
Gray Wire goes to CB3.

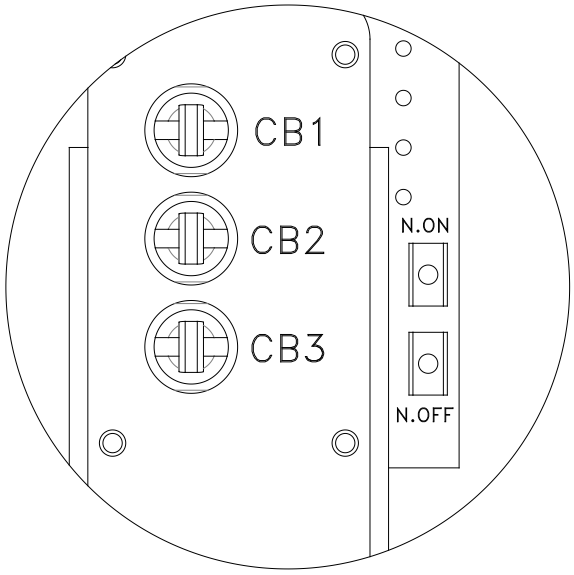

INSTALLING NORMALLY OFF AC OUTPUT WIRES WITH OCB's:

(See I/O Manual for other connections if required)

Connect load wires to the system's Output Circuit Breaker Board Terminal Block. Connect the load hot wire to the terminal block labeled **"L"**. Connect the load neutral wire to the **"N"** terminal connection. Connect the ground wire to the **"G"** terminal provided.

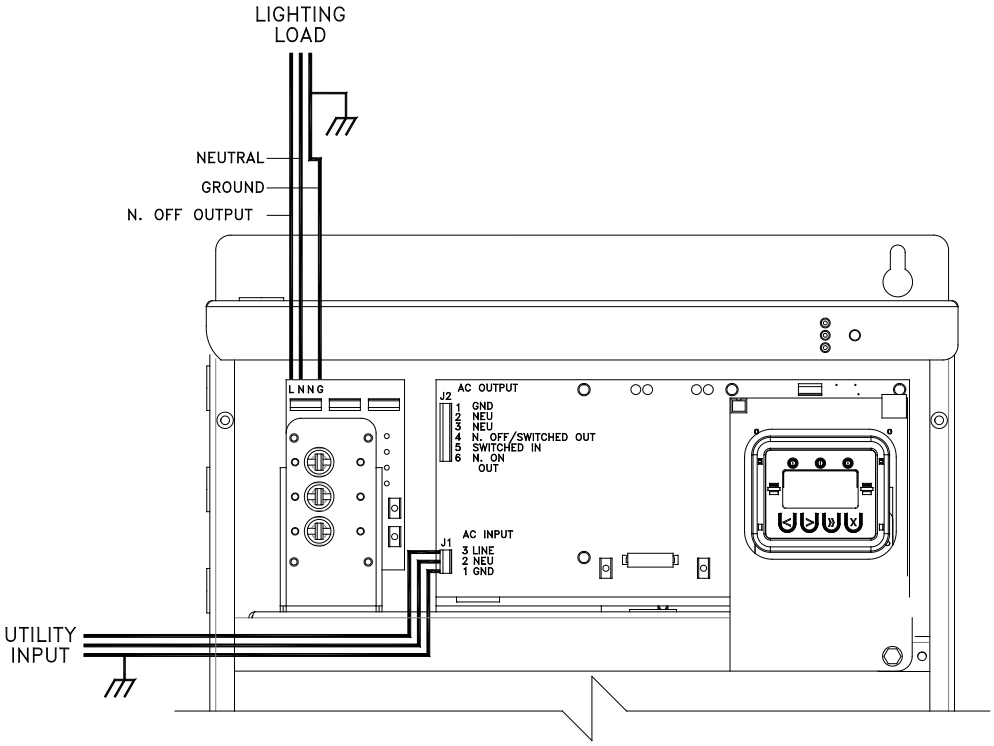

Figure 4.6

Output Circuit Breaker Connections:

CB1 Connections are to the left terminal block.
CB2 Connections are to the middle terminal block.
CB3 Connections are to the right terminal block.

CEPS-750, CEPS-1100: Maximum of 6 OCB's.
2 Rows of 3 OCB's

OCB Information:

OCB Configuration is Field Changeable.

Move OCB Wire to either N/ON or N/OFF Terminal.

Brown Wire goes to CB1.
Violet Wire goes to CB2.
Gray Wire goes to CB3.

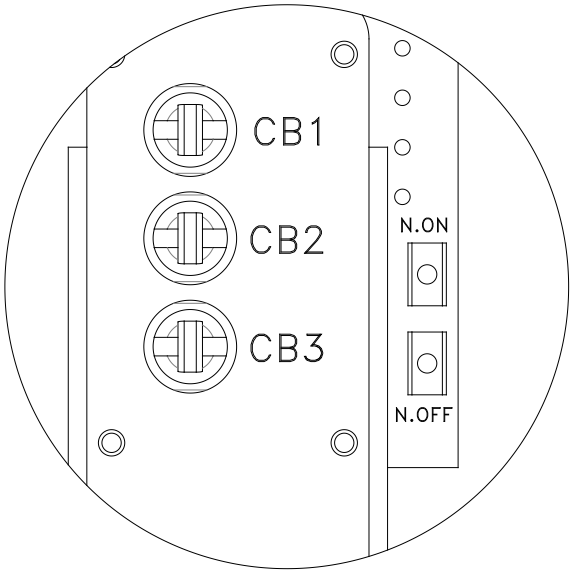

INSTALLING SWITCHED INPUT (SWITCHED IN) & SWITCHED OUT WIRES WITH OCB:

(See I/O Manual for other connections if required)

Connect the load wires to the system's Output Circuit Breaker Board Terminal Block. Connect the load hot wire to the terminal block labeled **"L"**. Connect the load neutral wire to the **"N"** terminal connection. Connect the ground wire to the **"G"** terminal provided.

Connect the switch device wires to the system's area labeled **"AC OUTPUT"**. Connect the switch device hot lead to the **"SWITCHED IN"** terminal of the output terminal block. Connect the switch device neutral wire to the **"NEU"** terminal available. Connect the ground wire to the **"G"** terminal provided.

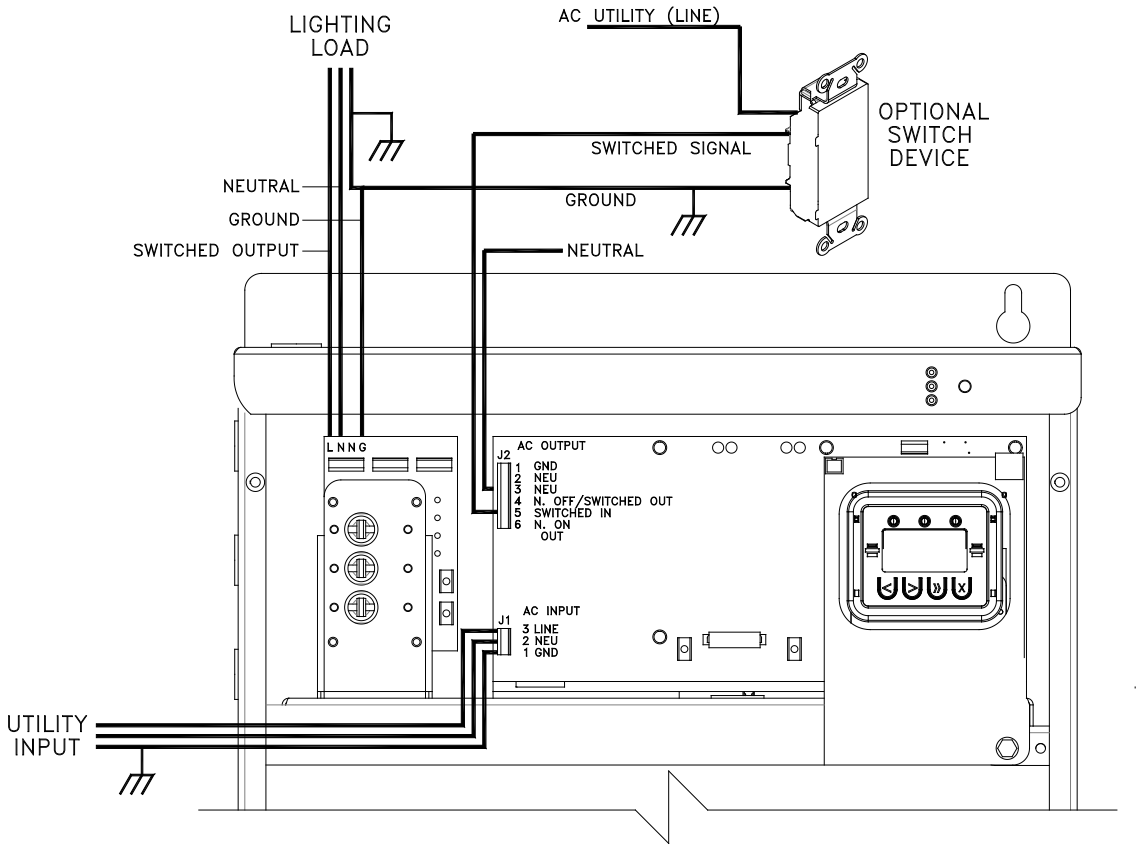

Figure 4.7

NOTE: If your unit was purchased with a normally on output circuit breaker and a switched circuit is required the circuit breaker wiring must be change to a normally off circuit breaker.

<u>OCB Information:</u>

OCB Configuration is Field Changeable.

Move OCB Wire from N/ON to N/OFF Terminal.

Brown Wire goes to CB1.

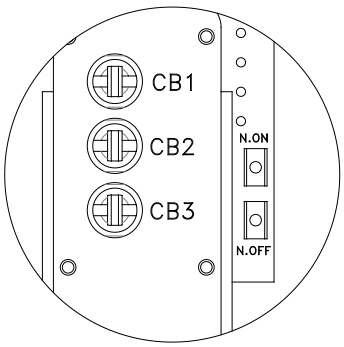

SECTION 5

INSTALLING BATTERIES AND DC WIRING

WARNING

Only qualified service personnel (such as a licensed electrician) should perform the battery and DC wiring installation. Risk of electrical shock.

Safety Instructions

IMPORTANT SAFETY INSTRUCTIONS

SAVE THESE INSTRUCTIONS

This section contains important instructions that a qualified service person should follow during installation and maintenance of the system and batteries. ONLY a qualified service person should work with the batteries.

CAUTION

Full voltage and current are always present at the battery terminals. The batteries used in this system can produce dangerous voltages, extremely high currents, and a risk of electric shock. They may cause severe injury if the terminals are shorted together. You must be extremely careful to avoid electric shock and burns caused by contacting battery terminals or shorting terminals during battery installation. Do not connect wires between terminals of the same battery. Do not touch un-insulated battery terminals.

A qualified electrician familiar with battery systems and required precautions must install and service the batteries. Any battery used with this unit shall comply with the applicable requirements for batteries in the standard for emergency lighting and power equipment, UL 924. Cabinets are design to be used with, and batteries must be replaced with, manufacturer battery number or a manufacturer approved equivalent (see the battery wiring diagram that came with the system). If you substitute batteries not supplied by manufacturer, the unit's UL listing is void and the equipment may fail. Installation must conform to national and local codes as well. Keep unauthorized personnel away from batteries.

The electrician must take these precautions:

Wear protective clothing and eyewear. Batteries contain corrosive acids or caustic alkalis and toxic materials and can rupture or leak if mistreated. Remove rings and metal wristwatches or other metal objects and jewelry. Don't carry metal objects in your pockets where the objects can fall onto the batteries or into the cabinet.

Tools must have insulated handles and must be insulated so that they do not short battery terminals. Do not allow a tool to short a battery terminal to another battery terminal or to the cabinet at any time. Do not lay tools or metal parts on top of the batteries, and do not lay them where they could fall onto the batteries or into the cabinet.

Install the batteries as shown on the battery-wiring diagram provided with the system. When connecting cables, never allow a cable to short across a battery's terminals, the string of batteries, or to the cabinet.

Align the cables on the battery terminals so that the cable lug does not contact any part of the cabinet even if the battery is moved. Keep the cable away from any sharp metal edges.

Before Installing the Batteries

Tools

CAUTION

Always use insulated tools when you work with batteries. Always torque connections to the manufacturer's recommendations.

When you work with system batteries, you need the following tools. The tools must be insulated so they do not short battery terminals to the cabinet. Wear the safety equipment required by local code whenever the door is open and whenever you are working on batteries. Other tools may be necessary for batteries.

- Digital volt-ohm meter
- 10mm / 7/16" open end wrench
- 3" extension socket
- Ratchet
- Wire brush
- Electrical tape
- Conductive grease
- Brush (to apply grease to terminals)
- Safety equipment required by local codes
- Torque wrench calibrated in inch-pounds or Newton-meters
- 10mm / 7/16" socket wrench
- Safety glasses with side shields

Battery Voltage (vdc)

Models	175	350	499	550	750	1100
Battery Volts	12V	24V	36V	36V	48V	48V

Battery Cable Sizing

The battery cables or wires used are Number 10-Gauge (5.26 mm^2) for all applications:

DC Disconnect

The system has a Battery Fuse inside the cabinet; this Battery Fuse lets you remove DC power from the batteries.

Installing and Connecting the Batteries

Battery Wiring Diagram

There is a battery-wiring diagram for each system in this section. This battery-wiring diagram shows how you should install the batteries and make terminal connections. Use the diagram as you follow the steps below.

Location

The system batteries belong inside the unit. Before you start installing the batteries, you must install the system in its permanent location. If you have not already done this, see "Location Guidelines" on page 9 to choose a location.

CAUTION

To prevent damage to your equipment, do not move the system after the batteries are installed.

To make sure a location is acceptable for the system, review the requirements in Section 3.

Arranging the Batteries

***NOTE** As you arrange the batteries, you must be wearing the required safety equipment.*

Arrange the batteries in the cabinet only as shown in the battery-wiring diagram. This arrangement is designed to maximize airflow around the batteries. The cabinets are designed so that battery cases should never touch. Air should be free to circulate. Clean the entire surface of all battery terminals with the wire brush before you install the batteries to create good contact points.

CAUTION

Never install the batteries in an airtight enclosure.

Torque Wrench

When you make battery terminal connections, use the torque wrench to tighten the battery terminal connections securely. You can find out what torque value to use by finding the battery number on the front of the battery. Then, use Table 5.1 to find the torque value for that battery.

Table 5.1 Battery Torque

Battery Type	Torque
NP33-12B	Torque to 36-54 in lbs. (4.1-6.1 Nm)
GP 12340	Torque to 36-54 in lbs. (4.1-6.1 Nm)
BAT-CG12033B	Torque to 70-87 in-lbs. (7.9-9.8 Nm)
XTV-12550	Torque to 36-54 in lbs. (4.1-6.1 Nm)
BAT-CG12055F	Torque to 70-87 in-lbs. (7.9-9.8 Nm)

Follow these steps to connect the cables:

***NOTE:** For standard 90-minute runtimes, 175W, 350W, 499W, 550W, 750W and 1100W models have only one battery string.*

This section explains how to install system batteries and cables. An electrician who is familiar with battery installations and applicable building and electrical codes should install the batteries.

WARNING

The batteries that will need to be installed in this system could cause you harm or severely damage the electronics if proper precautions are not followed. Batteries connected in series configuration could produce lethal voltages with extreme currents. All batteries should be inspected for damage prior to installation. Never install a battery that is leaking electrolyte. Battery terminals should be cleaned with a wire brush to remove any oxidation. All tools should be insulated. Rubber gloves and safety glasses are recommended.

CAUTION

If you are replacing batteries or repairing battery connections, follow the procedure in the section 6 to shut down your system and remove both AC and DC input power.

NOTE: If internally mounted Panel Display is provided, it should be unmounted while making the circuit board negative terminal point connection for easier screwdriver access.

175 (12vdc) Single Battery Installation

Using the black wire provided, push the wire through the conduit hole in the shelf of the cabinet and make the connection on the negative terminal point on the inverter circuit board. Place the battery in the battery compartment, with both the positive and negative terminals facing forward and bolt the unsecured end of the black wire to battery negative. Using the red wire provided, push the wire through the conduit hole in the shelf of the cabinet and make the connection on the positive terminal point on the inverter circuit board **(NOTE: For a non-basic unit the positive wire is factory connected already to the metering board for your convenience)**. Finally, bolt the unsecured red wire to the battery positive terminal (If Battery Temperature Probe is supplied; connect it at this time).

350 (24vdc), 499 and 550 (36vdc), 750 and 1100 (48vdc) are Multiple Battery Installation

Prior to battery installation, connect blue jumper wires to the negative terminal of the batteries except for the negative most battery. Using the black wire provided, push the wire through the conduit hole in shelf of the cabinet and make the connection on the negative terminal point on the inverter circuit board. Place the negative most battery in the battery compartment (no wires should be connected to this battery), and bolt the unsecured end of the black wire to battery negative terminal. Push the battery to the rightmost position in the cabinet with the negative terminal towards the back of the cabinet. Place the next battery, with the blue wire attached to the negative terminal, into the cabinet. The negative terminal should be towards the rear of the cabinet. Secure the blue wire to the positive terminal of the prior installed battery. Continue installing and connecting the batteries in this manner.

(If Battery Temperature Probe is supplied; connect it to the positive terminal of the first battery)

Once all batteries are in the cabinet, using the red wire provided, push the wire through the conduit hole in shelf of the cabinet and make the connection on the positive terminal point on the inverter circuit board **(NOTE: For a non-basic unit the positive wire is factory connected already to the metering board for your convenience)**. Finally, bolt the unsecured red wire to the battery positive terminal. Using the battery-wiring diagram, determine which batteries position on the cabinet floor.

1. Connect the cable from the Battery Terminal on the circuit board to the first battery neg. (-).

   Clean the cable connectors with the wire brush before you make the battery connections.

NOTE: *As you carry out the following step, use these guidelines:*
If you are using conductive grease, apply a thin coating of high-temperature conductive grease on each post and every cable connector before you assemble and torque the connection to slow corrosion.

2. In the battery string, connect the battery cables between the batteries as shown in the battery-wiring diagram (positive terminal to negative terminal). Torque the connections to the value shown for your battery in Table 5.1.

3. Connect the battery cables from one battery to the next as shown on the battery-wiring diagram. (350W – 1100W Systems only)

CAUTION

Hazardous voltage is present! System batteries are high current sources. These batteries can produce dangerous voltages, extremely high currents, and a risk of electric shock.

4. Connect the cable from the Battery Terminal on the circuit board to the last battery pos. (+).
5. Next, using the voltmeter to check the DC voltage between the battery positive (+) and the battery negative (-) on the battery terminal blocks on the Power PC Board. This voltage should be approximately the battery voltage record on the unit ID label. If it is greater than + or – 5% Vdc, review the battery wiring diagram. Correct any wiring errors and recheck the DC voltage; do not go on until your measurement is within + or – 5% Vdc. If the measurement is too high and you cannot find the cause of the problem, call SERVICE.

CAUTION

If you do not verify that voltage and current direction are correct, the equipment may fail.

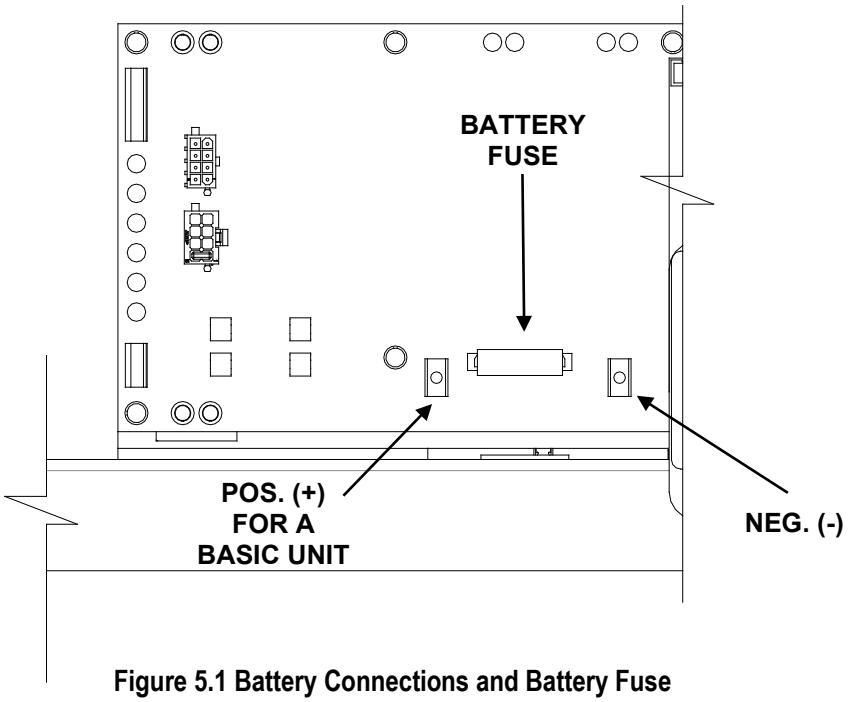

Figure 5.1 Battery Connections and Battery Fuse

Table 5.2 Extended Run Time vs. Output Power

	175	350	550	750	1100
Run Time (Minutes)	Output Power (Watts)	Output Power (Watts)	Output Power (Watts)	Output Power (Watts)	Output Power (Watts)
120 Minutes	135W	275W	450W	575W	850W
180 Minutes	95W	200W	325W	425W	650W
240 Minutes	75W	150W	225W	300W	450W
300 Minutes	55W	125W	175W	250W	350W
360 Minutes	45W	100W	150W	200W	300W

Battery Wiring Diagram for 175W (Grid Mount)

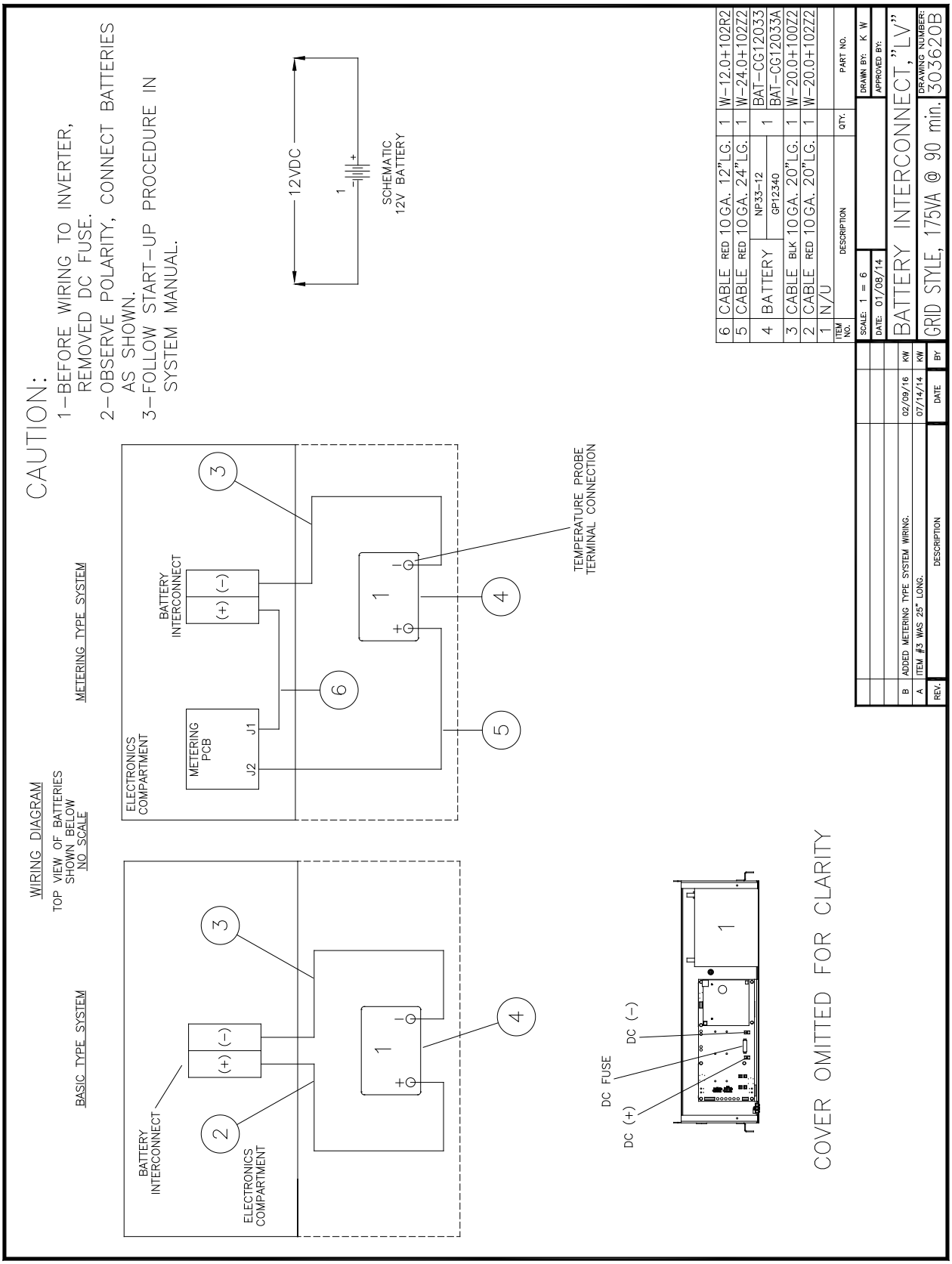

Battery Wiring Diagram for 175W

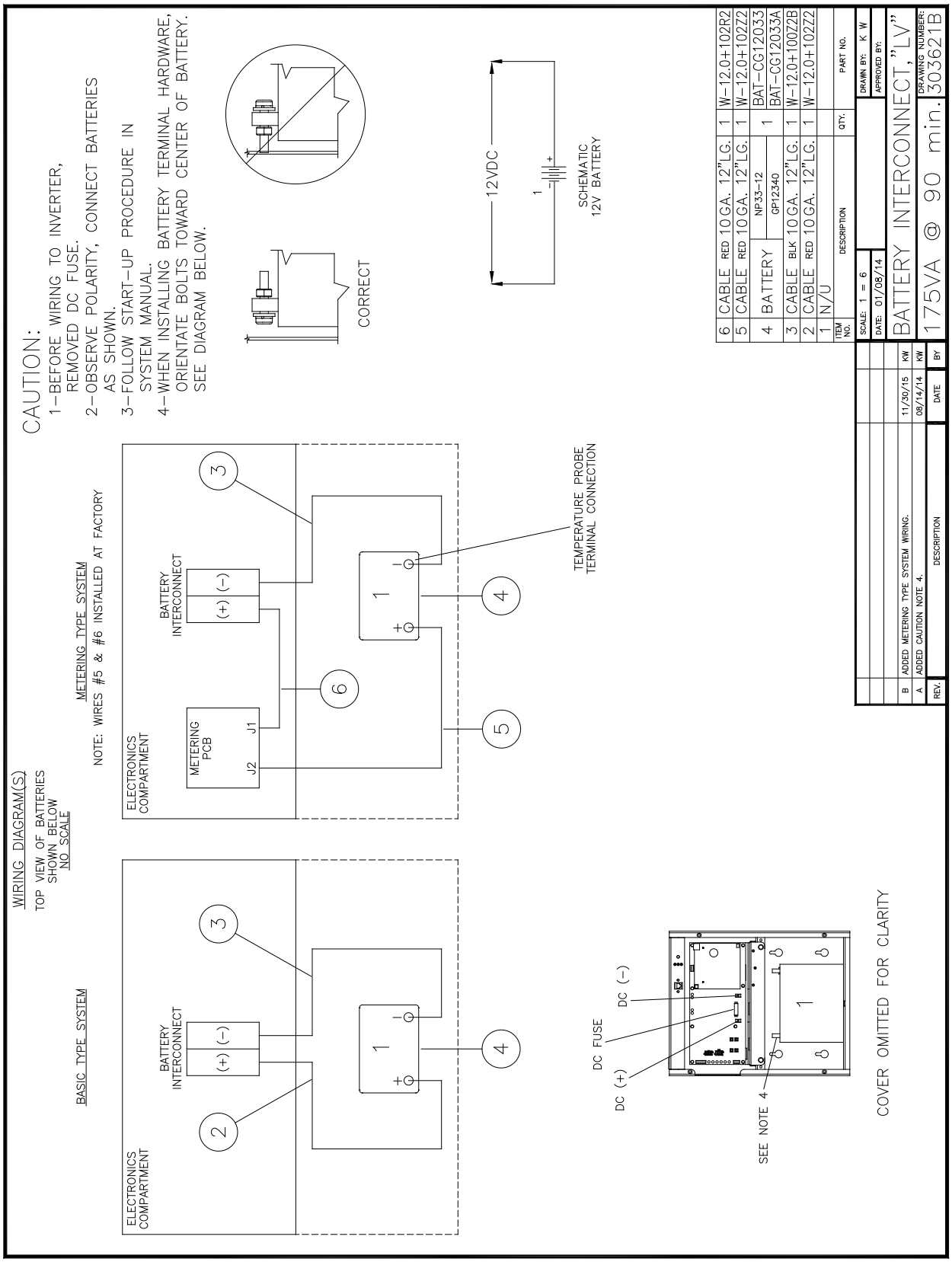

Battery Wiring Diagram for LV-350W

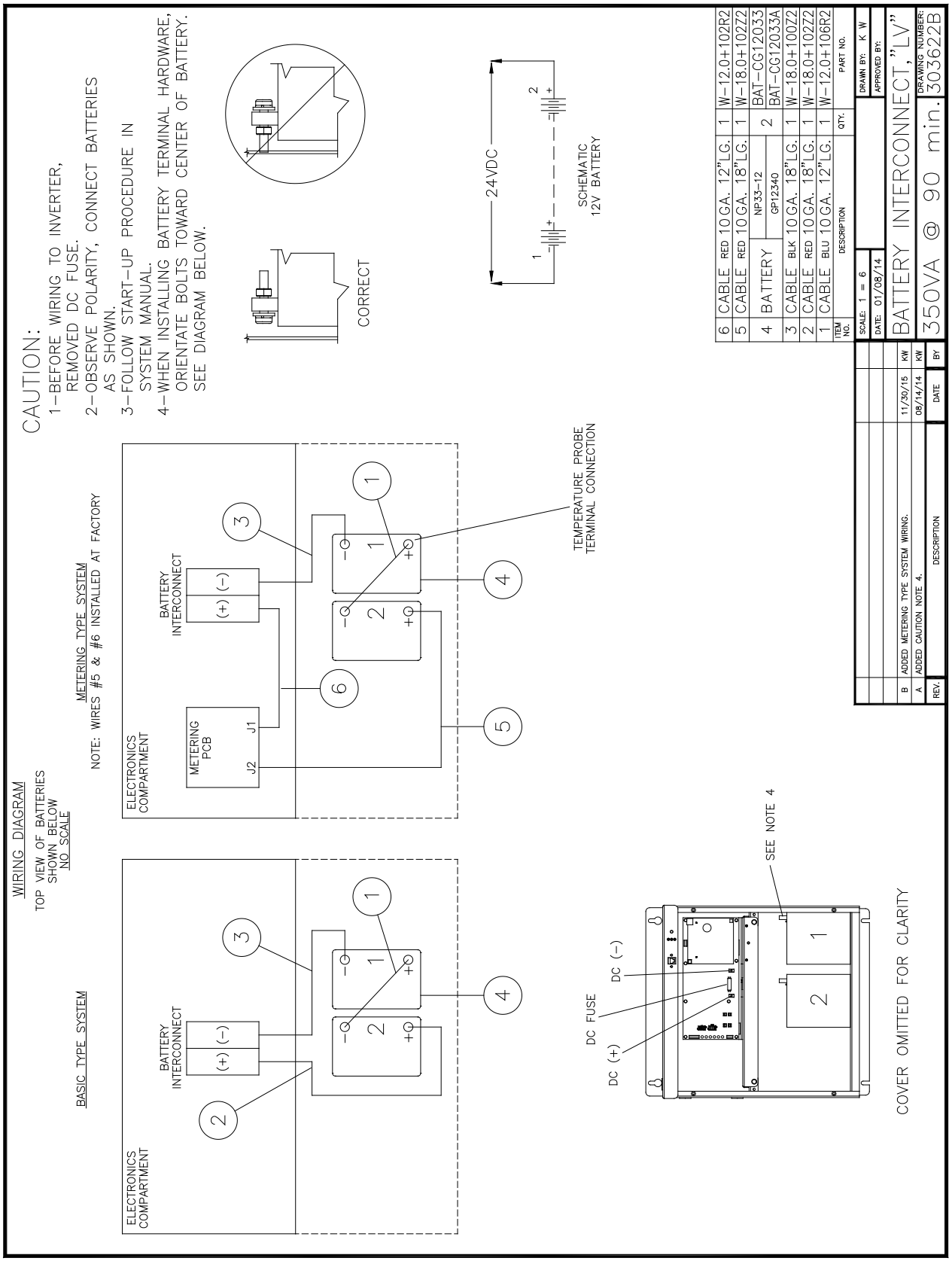

Battery Wiring Diagram for 499W

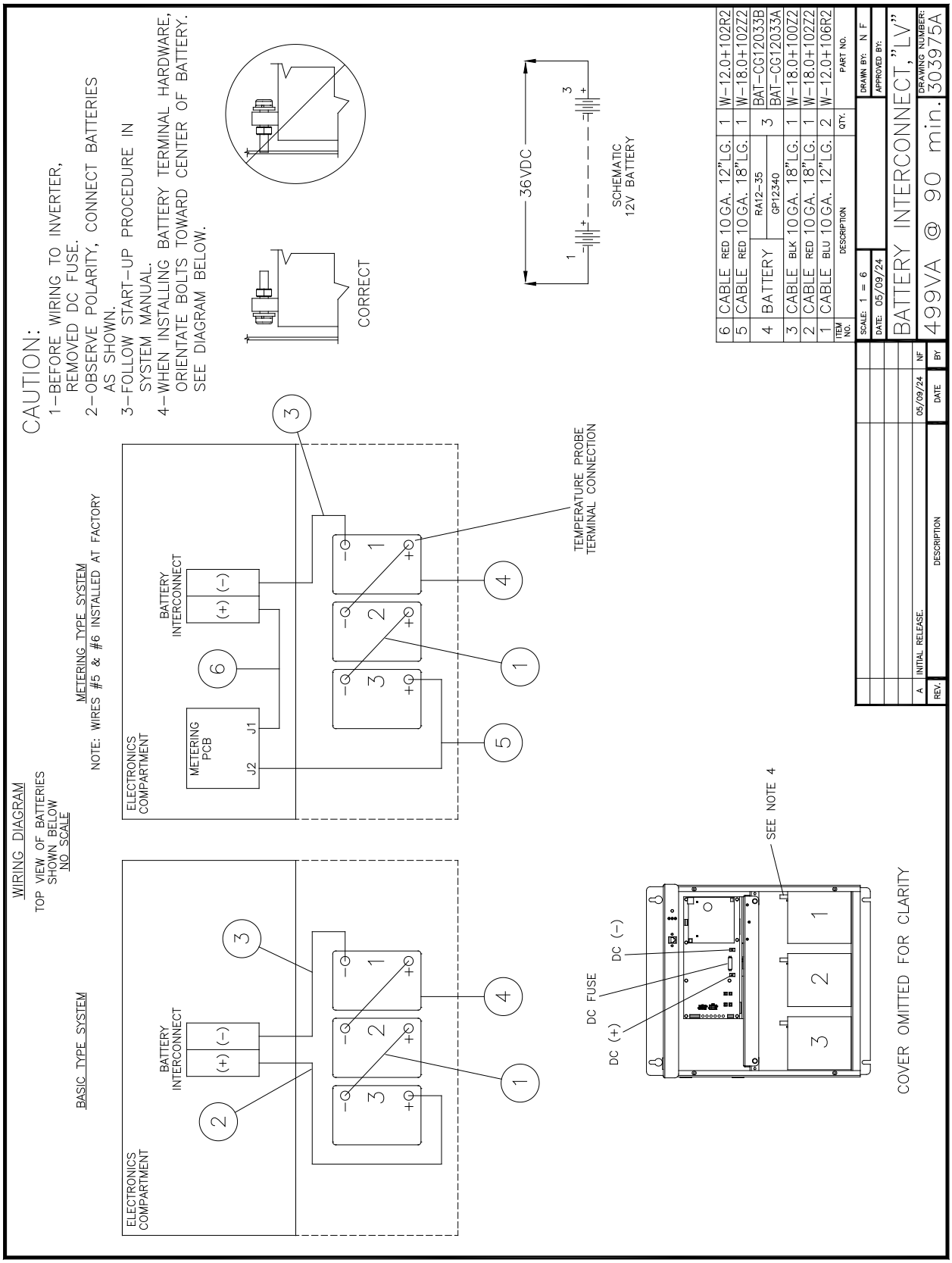

Battery Wiring Diagram for 550W

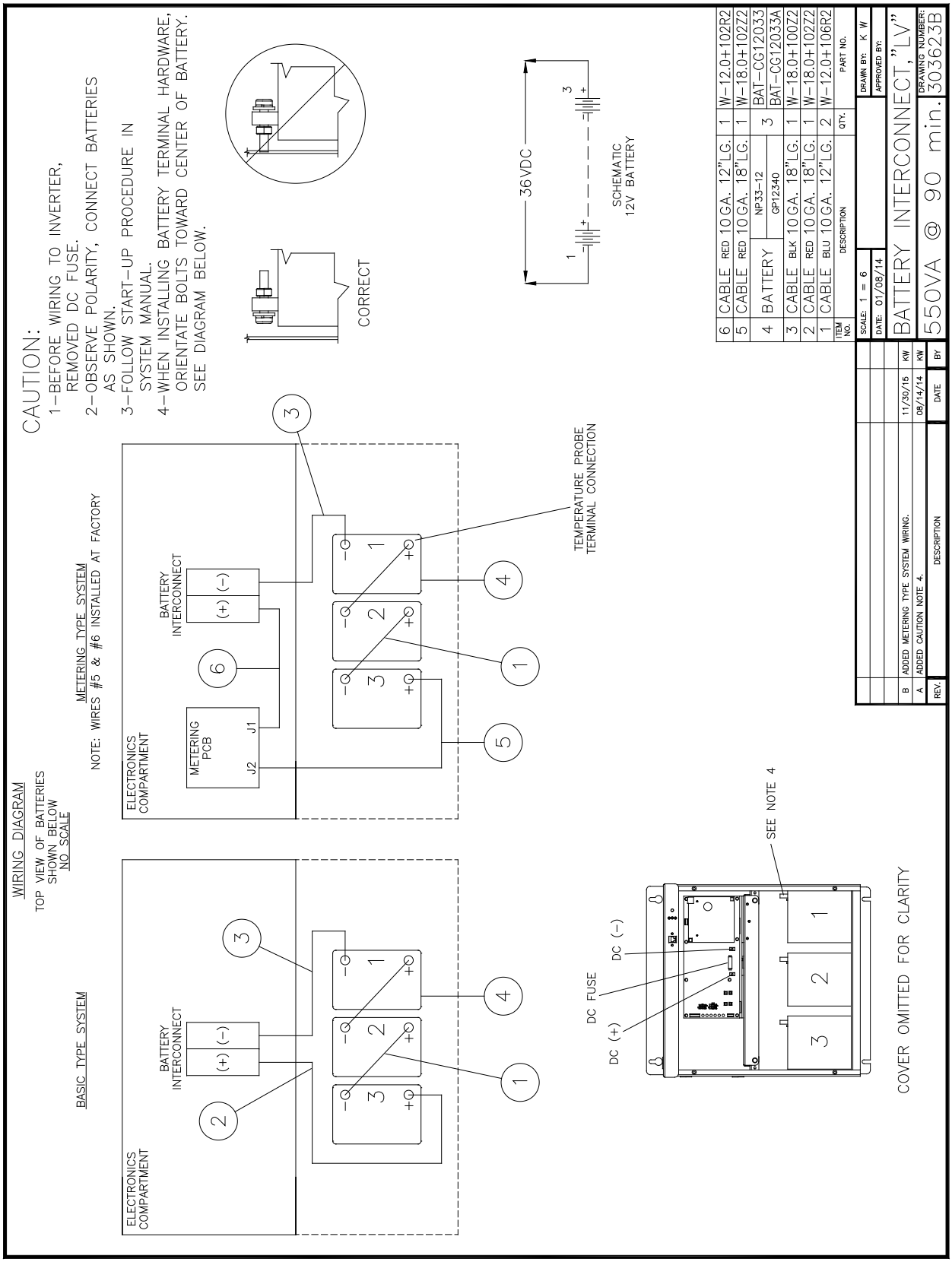

Battery Wiring Diagram for 750W

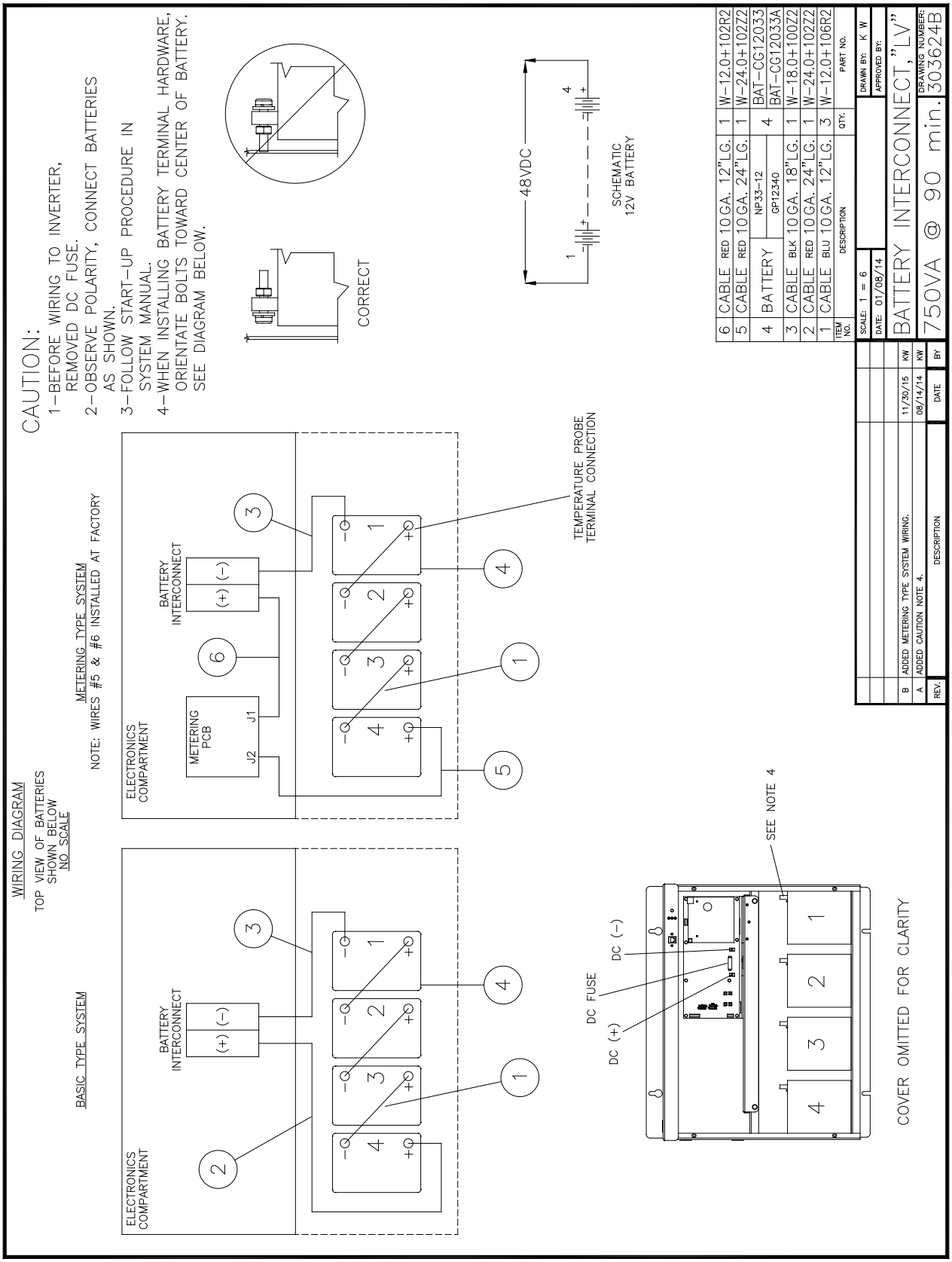

Battery Wiring Diagram for 1100W

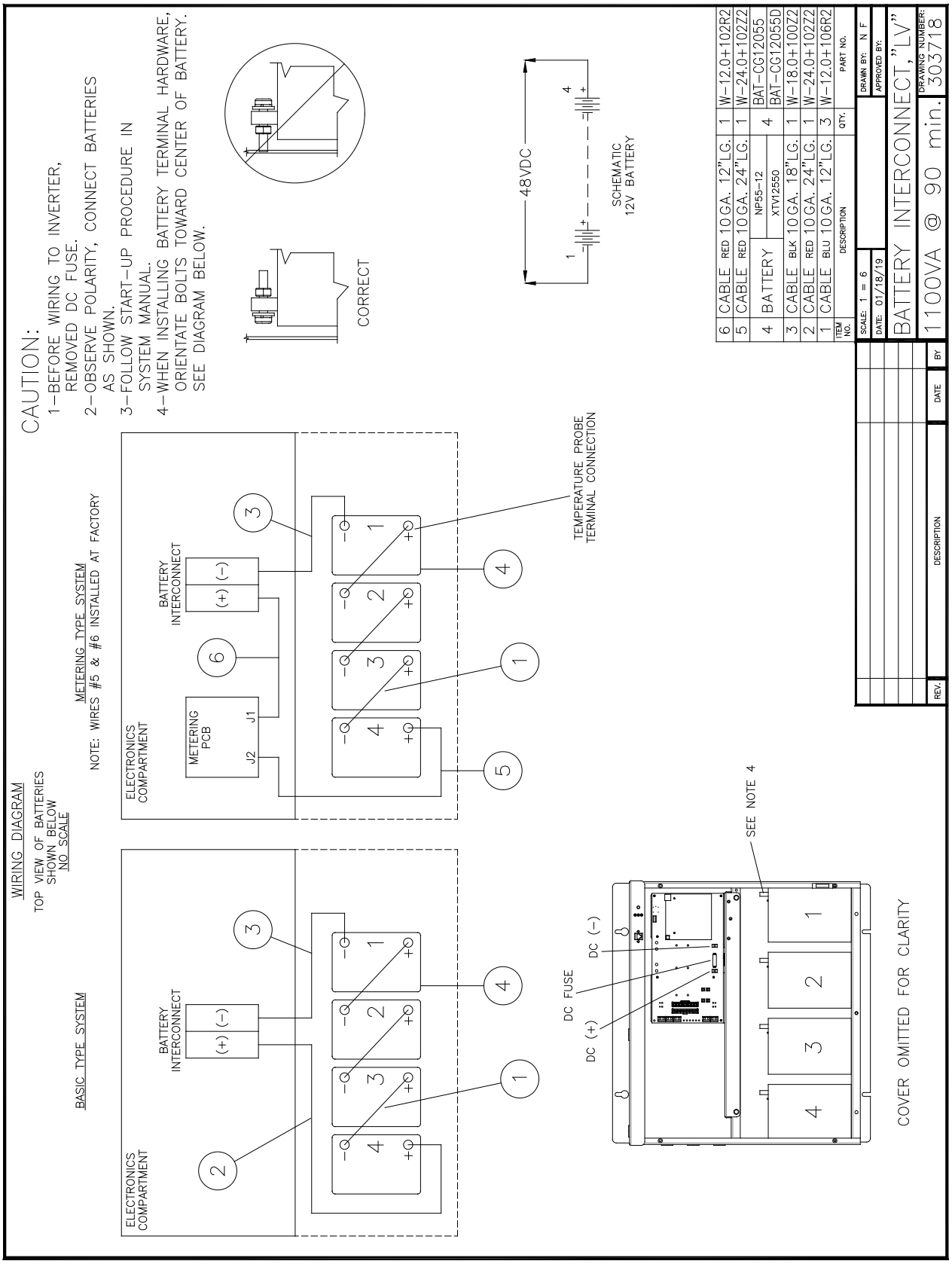

Replacing the Batteries

CAUTION

A battery can present a risk of electrical shock and high short circuit current. A qualified electrician familiar with battery systems should service the batteries.

Review all the safety instructions at the beginning of this chapter before you replace any batteries.

Use the Same Quantity and Type of Battery

CAUTION

You must use the same quantity and type of battery. Substituting batteries not supplied by manufacturer voids the UL listing and may cause equipment damage.

To ensure continued superior performance of your system and to maintain proper charger operation, you must replace the batteries in the system with the same number of batteries. These batteries must be the same types as the original batteries. The replacement batteries should have the same voltage and ampere-hour rating as the original batteries.

Handle Used Batteries with Care!

Assume that old batteries are fully charged. Use the same precautions you would use when handling a new battery. Do not short battery terminals or the battery string with a cable or tool when you disconnect the batteries! Batteries contain lead. Please dispose of old batteries properly.

CAUTION

Do not dispose of batteries in a fire because the batteries could explode. Do not open or mutilate batteries. Released electrolyte is harmful to the skin and eyes. It may be toxic.

Dispose of Batteries Properly

CAUTION

Batteries contain lead. Many states and local governments have regulations about used battery disposal. Please dispose of the batteries properly.

SECTION 6

STARTUP AND SHUTDOWN PROCEDURE

STARTUP PROCEDURE

For the initial startup of the system, follow these instructions. Failure to do so will void warranty.

CAUTION: HAZARDOUS VOLTAGES – ONLY QUALIFIED SERVICE PERSONNEL SHOULD PERFORM PROCEDURE.

1. Service Panel Circuit Breaker is off to the system and the Battery Fuse is not installed.
2. Plug in the Voltage Select Connector (supplied in DC fuse bag) for desired AC Voltage.
3. Turn on input feed circuit breaker at the building service panel.
4. Follow all safety precautions under section 5 and when installing the DC Battery Fuse a small spark may occur when the fuse is first installed; wear proper safety protective gear when installing fuse. If the fuse fails during installation then the batteries are not connected properly. Call service immediately.
5. The system is now running. There should be an output voltage present to the load and the battery charging light should illuminate after a few minutes.

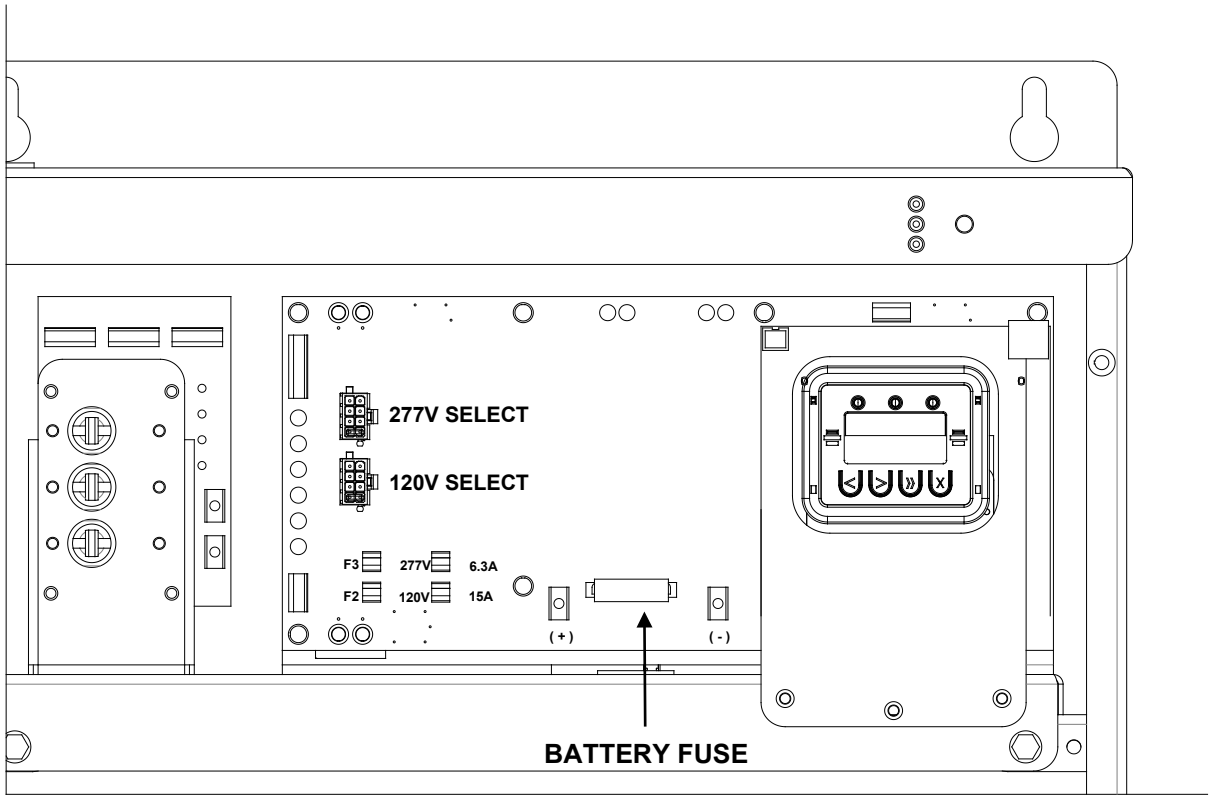

Figure 6.1 – 175, 350, 499, 550, 750 Battery Fuse & Voltage Select
(Shown with additional options)

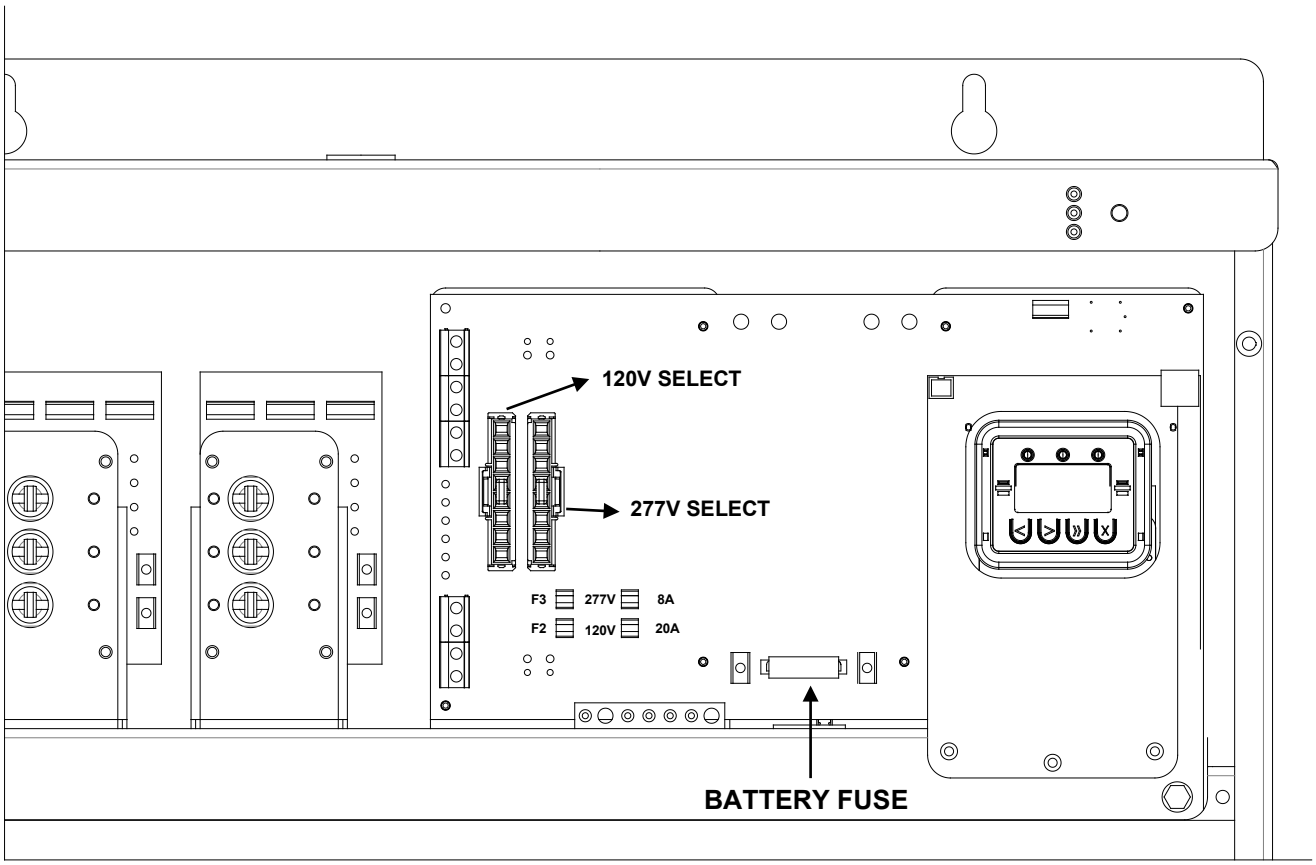

Figure 6.2 – 1100 Battery Fuse & Voltage Select (Shown with additional options)

SHUTDOWN PROCEDURE

1. Follow all safety precautions under section 5 and remove the DC Battery Fuse.
2. Interrupt the AC Main to the system by turning off the circuit breaker at the service panel.

CAUTION:

HAZARDOUS VOLTAGES STILL EXIST AT THE BATTERY TERMINAL CONNECTIONS AND WITHIN THE SYSTEM. AUTHORIZED SERVICE TECHNICIANS MUST DISCHARGE DC CAPACITOR AND TURN OFF UTILITY POWER BEFORE SERVICING EQUIPMENT.

DO NOT LEAVE THE SYSTEM SHUTDOWN FOR A PROLONGED LENGTH OF TIME. LEAD BASED BATTERIES WILL EXPERIENCE PERMANENT DAMAGE FROM LACK OF CHARGING AFTER A FEW MONTHS.

WARNING:

If the AC Input fuse is removed or blown greater than 48 hours, the DC fuse must be removed. Failure to do so could permanently damage the battery.

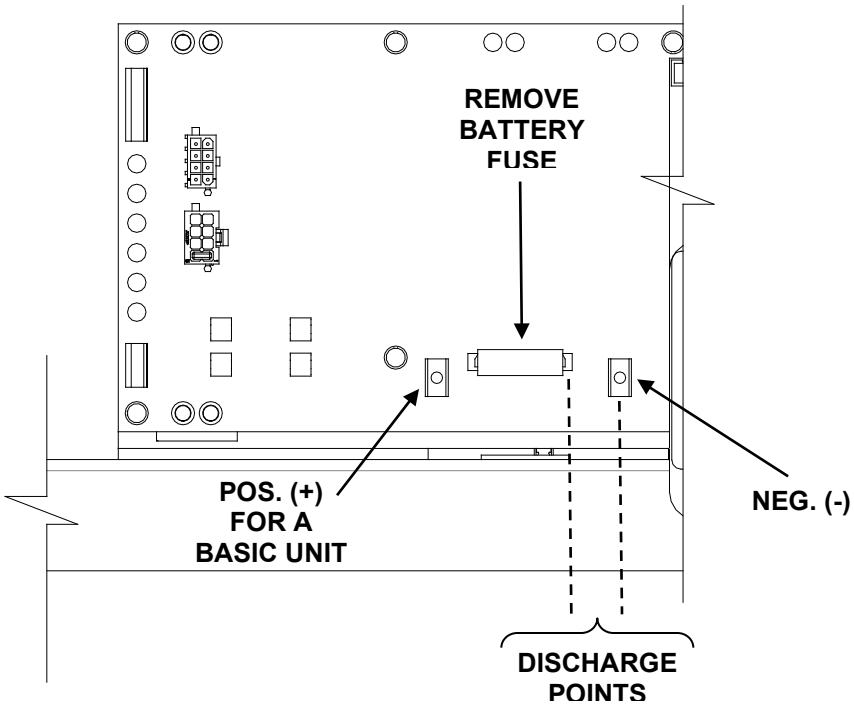

Figure 6.3 Remove Battery Fuse & Discharge DC Capacitor

SECTION 7

OPERATION

The following is a description of the system status by the LED indicators on the inverter cabinet. Note, the optional metering panel display contains three LED's to more broadly indicate status of the system, and they do not match the LED indictor functions described here. There is a separate manual that is provided to describe the panel display when included with the inverter.

Battery Charging – Red LED

When the AC Mains is connected to the line and the battery is charging under normal conditions, the red "BATTERY CHARGING" LED will illuminate. If the system is operating normal but in transition from an AC Mains return the light will be off.

A flashing light indicates a charger fault.

A double flashing light indicates a DC overvoltage fault. This occurs when there is another source connected to the load. Please make sure the output wires from the inverter are the only wires connected to the load. This may also occur if the battery is excessively charged.

A triple flashing light indicates an input AC fuse is blown.

System Ready – Yellow LED

When the system has adequate battery voltage to transfer, the yellow "SYSTEM READY" LED will illuminate. The system ready set point is approximately 5% above the nominal battery voltage. This feature prevents damage from multiple deep discharges of the battery. If the light is off the system is not ready for a discharge event.

A single flash of the LED indicates a failed monthly test. The alarm can be cleared by a total shutdown of the system or a successful monthly test.

A double flash of the LED indicates a failed yearly test. The alarm can be cleared by a total shutdown of the system or a successful yearly test.

A triple flash of the LED indicates a load reduction alarm. This will occur if there is a difference between the load reduction calibrated set point and the actual load during a monthly or yearly test. The alarm can be cleared by a total shutdown of the system or a successful load reduction test.

Battery Power – Green LED

When the inverter is producing output power (battery is being discharged), the green "INVERTER" LED will be illuminated. If the light is off the system is not passing the AC main to the load.

A single flash of the LED indicates an inverter overload while on inverter. The alarm can be cleared by a total shutdown of the system or by reducing the load to an acceptable value.

(For Advanced – Non Basic System)
A double flash of the LED indicates the inverter is in an overload condition while on utility. The alarm can be cleared by a total shutdown of the system or by reducing the load to an acceptable value. If the system transfers to battery back up during this overload mode the system will go into a single flash of the LED and the system will turn off after a period of time.

Summary Alarm Dry Contacts (SDC)

Contacts will change states with the following failures: Charger fault, failed monthly test, failed yearly test, load reduction fault, not passing AC utility to the load, overload fault, output voltage high or low, heatsink over temperature, input fuse failed and battery low voltage disconnect.
Maximum contact rating is 277VAC/10-amps. Silkscreen nomenclature shows a fault condition.

Sensitivity Reduction (Systems with optional display panel – see display panel manual)

This feature decreases the sensitivity of the unit. When power is lost the unit will wait longer to transfer to battery, usually about 2 cycles. This is useful in noisy environments where unwanted transfers are occurring. Remove jumper "JP1" prior to start up to activate this feature.

Load Reduction Fault (Systems with optional display panel – see display panel manual)

To enable the Load Reduction function:

1. Ensure the desired load is connected to the output. This will be used for the calibration of the load reduction alarm.
2. Remove the "JP2" LRED jumper on the Control Board 404128. Caution: Removing the jumper will cause the UPS to transfer to battery.
3. The UPS will transfer to battery operation. At this time the load is being calibrated for the alarm set point which is 90% of the measured load.
4. Once the unit transfers back to line operation the Load Reduction Function is configured.
5. Ensure that the jumper "JP2" is placed back on the control board. Failure to do so will result in disabling the load reduction function the when power is removed.

To disable the Load Reduction function:

1. Completely power the system down by removing both AC and DC voltages. Remove the jumper "JP2" from the control board 404128.
2. Follow the startup procedure to turn power on the "LV" system.
3. Place the jumper "JP2" back on the control board 404128.

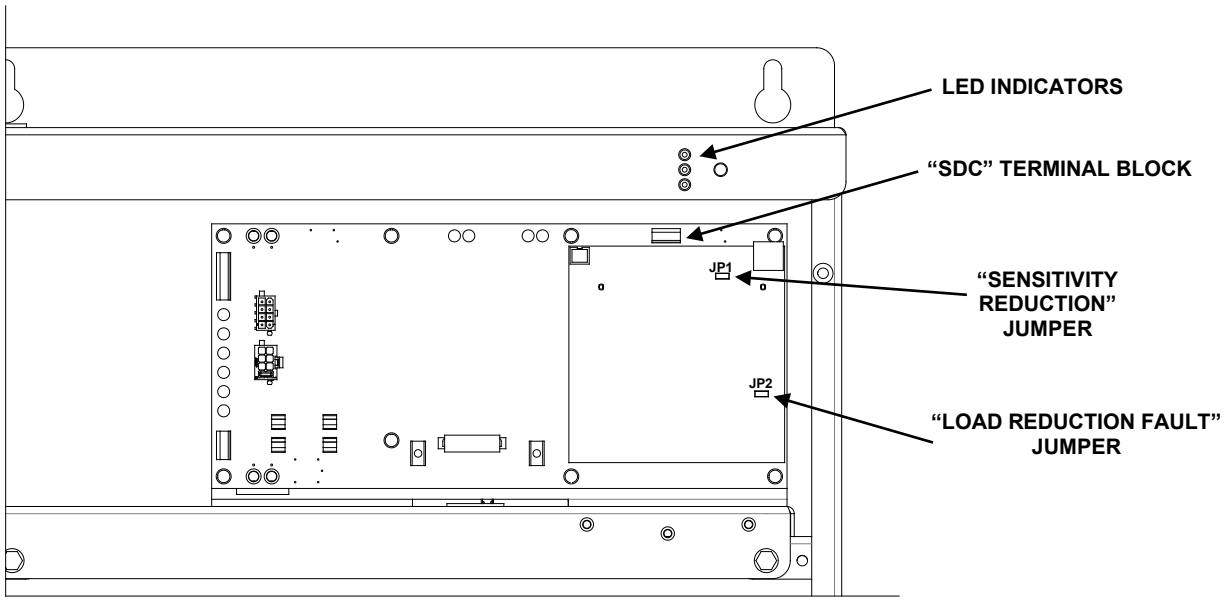

Figure 7.1 – SDC Terminal, Sensitivity & Load Reduction Jumpers

SECTION 8

SPECIFICATIONS

Series General Specifications

Input	Voltage	120 or 277Vac 1-phase 2-wire +10% -15%
	Input Frequency	60Hz, +/- 3%
	Synchronizing Slew Rate	1Hz per second nominal
	Protection	Fuse
	Harmonic Distortion	< 10% (For Resistive Load)
	System Short Circuit Rating	10,000 AIC for 120V Systems & 1,500 AIC for 277V Systems
Output	Voltage	120 or 277Vac 1-phase 2-wire
	Static Voltage	Load current change +/-2%, battery discharge +/-12.5%
	Dynamic Voltage	+/-10% for load step change, recovery within 5 cycles
	Harmonic Distortion	< 3% THD for linear load
	Output Frequency	60Hz +/- .05Hz during emergency mode
	Load Power Factor	.5 lag to .5 lead
	Inverter Overload	250% for 16 Cycles, 110% continuously
	Output Types	Normally-On, Normally-Off & Switch
	Protection	Optional Distribution Circuit Breaker(s)
Battery	Type	Valve-regulated sealed lead-calcium
	Charger	Microcontroller, 3-stage charger (recharge - 24hr)
	Protection	Automatic low-battery disconnect; automatic restart upon utility return
	Disconnect	Fuse
Environmental	Altitude	< 10,000 feet (above sea level) without derating
	Operating Temperature	Inverter: 0° to 40° C (32° to 104° F)
		Battery: 20° to 30° C (68° to 86° F)
	Storage Temperature	-20° to 70° C (-4° To 158° F) (electronics only)
	Relative Humidity	< 95% (non-condensing)
General	Design	Line interactive PWM inverter type utilizing MOSFET technology
	Generator Input	Compatible with generators (25kVA or larger)
	Indicator Lights & Switch	Charging, Ready, Inverter and Test switch
	Optional Control Panel	OLED display with key pad controls/functions & scrolling system status.
	Optional Metering	Input & Output Voltage, Battery Voltage, Battery & Output Current, Output VA, Input Current, Inverter Wattage
		Ambient/Battery/Heatsink Temperature, Input Frequency, UPS Time & Events, Days of Operation
	Programmable Alarms (Requires Optional Metering)	High/Low AC Input Volts, High/Low AC Input Frequency, High/Low Battery Voltage
		High/Low Battery Temperature, High/Low Ambient Temperature, On Inverter Time
	Standard Alarms	Charger Fault, Failed Monthly Test, Failed Yearly Test, Load Reduction Fault, Overload Fault,
		High/Low Output Voltage, Input Fuse Failed, Heatsink Over Temperature, Battery Low Voltage Disconnect.
	Optional Communications	BACnet, BACnet IP, MODBUS, MODBUS TCP, IoT
	Alarm Contacts	Summary Fault Form "C" Contacts
	Optional Alarm Contacts	Inverter On, AC Present & other I/O Alarms (Option will be available at a later date)
	Warranty	3 year standard warranty includes all parts. Up to 10 years prorated warranty on batteries.
	Optional Warranties	Extended warranties, Preventative Maintenance and/or Customized Service Plans.
	Factory Start-up	Optional factory start-up is available.
	5 Year Service Plan	Optional 5 year service plan is available.
Physical	Cabinet	Wall or [Recess or T-Grid (175W only)]
	Cooling	Convection Cooled
	Cable Entry	Top or Side
	Access	Front

SECTION 9

MAINTENANCE AND SERVICE

The Self-testing feature of the inverter ensures that the system is tested at least once per month for 5 minutes and once per year for 90 minutes. If there are any problems with the self-tests, the fault log shall indicate which faults occurred. Please see the fault descriptions and troubleshooting guide.

A few simple maintenance operations performed periodically will help ensure many years of trouble free operation. Battery terminals should be checked for tightness and corrosion. If severe corrosion is evident, maintenance is required to correct this situation.

Since the unit depends on unrestricted airflow for cooling of power handling components, it is important to keep the air vents free of any obstruction. If the environment tends to be extremely dusty, occasionally blow away any accumulation of dust on components. Please follow the shutdown procedure before cleaning.

CAUTION: Follow the shutdown procedure (See Section 6) before cleaning. An authorized technician only should perform Service!

Table 9.1 Preventive Maintenance Schedule

SERVICE TO PERFORM:	PERFORM SERVICE EVERY:		
	3 MONTHS	6 MONTHS	12 MONTHS
TEST UNIT: **NOTE:** Perform manual test only when critical load is connected but not required. ----- Output voltage should be present. ----- Confirm operations of Front Panel Indicators.	X		
INSPECT BATTERIES: ----- All connections are tight. ----- Connections have no corrosion. (Clean if necessary).		X	
CLEAN UNIT: NOTE: Unit must be shut down during this service. ----- Inspect air vents and clean if necessary. ----- Clean excessive dust from inside cabinet.			X

"X" Indicates when to perform service. Lines below the "X" are for the date of service.

TROUBLE SHOOTING CHART

Note: Numbers represent likely hood of Problem for each Symptom, 1 being most likely. Ex.) If "No LED lights…" the most likely Problem "1" is "Defective LED Display", followed by "2" "Batteries dead…".

THE NUMBER IN THE CHART INDICATES ORDER IN WHICH PROBLEMS SHOULD BE CHECKED / PROBLEMS	SYMPTOMS	Inverter will not run during a power failure	System draws excessive AC input current	AC output voltage low during a utility power failure	System overheats, smells, smokes, etc.	System noisy, transformer hum during a power failure	System blows battery fuse	Charger not charging properly, batteries low or dead	Battery acid leaking in cabinet or around tops of batteries	Battery voltage does not read properly after Installation of fresh cells	Battery Voltage low or non existent	No LED lights when system has utility and DC	System will not return to utility or transfers to battery on start up
Defective MOSFET(s) (Power Board)		2		3	3		2		2				
No AC input voltage								2					
Defective inverter		3		2	2	1	4						
Output volt-ampere rating of unit being exceeded		5	1	1	7	2							
Ambient temperature too high, vents blocked					1				4				
Shorted load			2	4		3							
Open or Missing battery fuse		1									1		
One or more Battery polarities wrong							1			4	5		
Battery capacity low		6								3	2		
Wrong amount of battery cells in series		8			5		3	3	1	1	3		
Batteries dead or defective		7						4	3	2	4	2	
Defective Control Board		4			6							3	3
Transformer not connected for proper voltage, or improper jumper selection			3		4			1					
Inadequate AC input								5				4	1
Defective LED Display												1	2
Defective Jumper		9		5									4

SECTION 10

WARRANTY

RETURN MATERIAL AUTHORIZATION (RMA) POLICY

No return material is accepted without advanced approval by the Field Service Department "Return Material Authorization"(RMA).

Every effort will be made to correct problems over the phone before a RMA is granted. Cooperation will save both time and expense for customer and manufacturer.

If it is deemed necessary to return material, an order must be placed with the original distributor for the replacement material with a core charge agreement.

Under the core charge agreement an order will be placed by the original distributor for a predetermined amount. The customer has 30 days to return the non-working material after receiving the replacement material. If it is not received back within the allotted time frame the order will be invoiced and the customer will be responsible for the incurred charges.

OUT OF WARRANTY REPAIR CHARGES AND LABOR

Contact Field service for current parts and labor rates. A minimum rate will be assessed. The manufacturer will not proceed with repairs of an out of warranty unit until authorization in the form of a purchase order is received from the customer. The unit for repair must be returned prepaid with an RMA number on the carton. For travel to the job site, a quote "Not to Exceed" estimate will be given. A purchase order to cover that amount is required before a trip to the job site is made.

LIMITED WARRANTY

The parts for the electronics portion of this equipment are warranted against defects in workmanship and material for a period of three years from time of shipment, but in no case will this warranty be valid if installation of equipment is not accomplished within 180 days from date of shipment. Batteries cannot be disconnected from the unit for long periods (180 days) or they will not be able to charge, creating malfunction of both batteries and/or electronics and thereby voiding the warranty. Systems ordered with "Heavy Lead" batteries over 25 Ah have a one year unconditional battery warranty with an additional prorated warranty contingent upon timely return of warranty registration card and the terms called out in the particular battery warranty sheet. See individual battery warranty policy.

The warranty does not cover damage caused by abuse, improper environmental conditions, shipping damage, improper electronics and/or battery installation, unauthorized modifications, service by unauthorized personnel, transportation of damaged equipment, or acts of war. Damage due to lack of maintenance (where applicable) or damage resulting from installation in areas with other than normal temperatures are not covered. See the battery warranty policy for details, as adverse environmental conditions reduce battery life and void the warranty. Replacement of fuses, and/or contractor labor is not included in warranty. Damage do to acts of nature, such as, but not limited to, lightning, flooding, explosions and earthquakes, are not covered.

The warranty is limited to the repair and/or replacement of parts and/or units that upon examination at our factory are determined to be defective and in our judgment are subject to repair or replacement. Onsite labor and travel is an additional charge.

All such repair shall be manufacturer's exclusive remedy. A date code, part number and serial number identify all such units.

TO THE EXTENT ALLOWED BY LAW, MANUFACTURER DISCLAIMS ALL OTHER WARRANTIES, EXPRESS OR IMPLIED, INCLUDING, BUT NOT LIMITED TO, AND LEED WARRANTIES OR MERCHANT ABILITY OR FITNESS FOR A PARTICULAR PURPOSE, AND ANY IMPLIED WARRANTY OF MERCHANT ABILITY OR FITNESS FOR A PARTICULAR PURPOSE ON PRODUCT IS LIMITED IN DURATION TO THE DURATION OF THIS WARRANTY. TO THE EXTENT ALLOWED BY LAW, THE MANUFACTURER SHALL NOT BE LIABLE FOR ANY SPECIAL, INCIDENTAL, OR CONSEQUENTIAL DAMAGES INCLUDING, BUT NOT LIMITED TO, LOSS OF PROFITS, INJURIES TO PROPERTY, LOSS OF USE OF THE PRODUCT OR ANY ASSOCIATED EQUIPMENT.

Special on site extended warranties are also available upon request. The warranty period may be adjusted because of special circumstances, but only by arrangement with the manufacturer at the time of purchase.

All in or out of warranty repaired material or replacement units/parts carry a 90-day new part guarantee. Return of your original repaired component or unit is not guaranteed.

This limited warranty is for the 48 contiguous states.

For international warranty information, call the Field Service Department. See telephone number in front of manual. The standard warranty can be extended and renewed for a nominal fee. Please contact the factory for pricing information.

10 Year Stationary Battery
Heavy Lead Series
Sealed Lead Calcium
Warranty Policy

All sealed lead calcium batteries of 24-ampere hours or more are guaranteed against defective material and workmanship for one year from date of shipment. The manufacturer will repair or replace at its option, F.O.B. factory, any battery proven to be faulty due to a manufacturing defect. This does not include physical damage caused during shipment.

There is also an additional nine year prorated warranty, providing the following conditions are met:

A. The batteries shall be installed, and constantly maintained and operated in accordance with published instructions in our standby power unit or battery charger manuals.
B. Continuous battery maintenance must be performed under the Manufacturer's Service / Maintenance Contract or an approved equal.
C. The average ambient temperature shall not exceed 77 degrees Fahrenheit.
D. Cell temperatures shall not exceed 92 degrees Fahrenheit for more than 30 days annually.
E. Battery service records must be maintained.
F. Batteries must be installed and energized within 180 days of shipment.
G. System warranty registration card must be filled out and returned to the manufacturer upon installation.

If any battery fails to deliver 80% of its capacity *, within the 10 year warranty period, the manufacturer, at its option, will repair or replace it on a prorated basis, F.O.B. factory, based on the current battery price and remaining service life.

This warranty only applies to the original end user of the manufacturer's battery powered backup equipment or battery chargers listed on the warranty registration card and is non-transferable. This warranty does not apply to broken containers, covers, or terminals or batteries which have been frozen or damage due to neglect, undercharging, shipping, or abuse such as fire, flooding, explosives or any acts of nature. This warranty does not include labor to remove or install batteries covered herein. For battery service, call or write to the address that is on front of the manual.

***All batteries are rated to give 95% capacity upon installation and 48 hour charge. These batteries will reach 100% of rated capacity after a minimum of six months on float service or ten complete charge and discharge cycles.**

REMOVING INVERTER CHASSIS FOR RMA

1. See Shutdown Procedure in Section 6. **WARNING**: For protection place a locking device on the circuit breaker that feeds the AC Voltage to the LV system.
2. Disconnect Battery Negative (-) wire from the PC Board. **CAUTION** should be used that the wire lug does not touch any part of the system. Insulate the exposed ring lug on the wire. Slide wire through Inverter Chassis hole.
3. Disconnect Battery Positive (+) red wire from the battery terminal.
4. If the system has a Battery Temperature Probe Lug. Remove the lug from the battery and cut the cable-tie securing the wire to the cabinet.
5. Disconnect AC Input and AC Output connections.
6. Unplug Ribbon Connector going to the PC Board.
7. If Summary Dry Contacts are being used; Disconnect wires.

   If the system has a Remote Display; Unplug Cable. If the system has an Optional Relay I/O Board; Unplug cable(s) and Disconnect wires.
8. **For OSHPD Units Only**: Using a ratchet and a 3/8” socket remove # 10-32 KEP nut(s).
9. Using a ratchet and a 3/8” socket remove the two screws securing the Inverter Chassis to the cabinet. Slide Inverter Chassis out of the cabinet.

[To reinstall the Inverter Chassis; reverse the process (reconnect) and see Startup Procedure in Section 6]

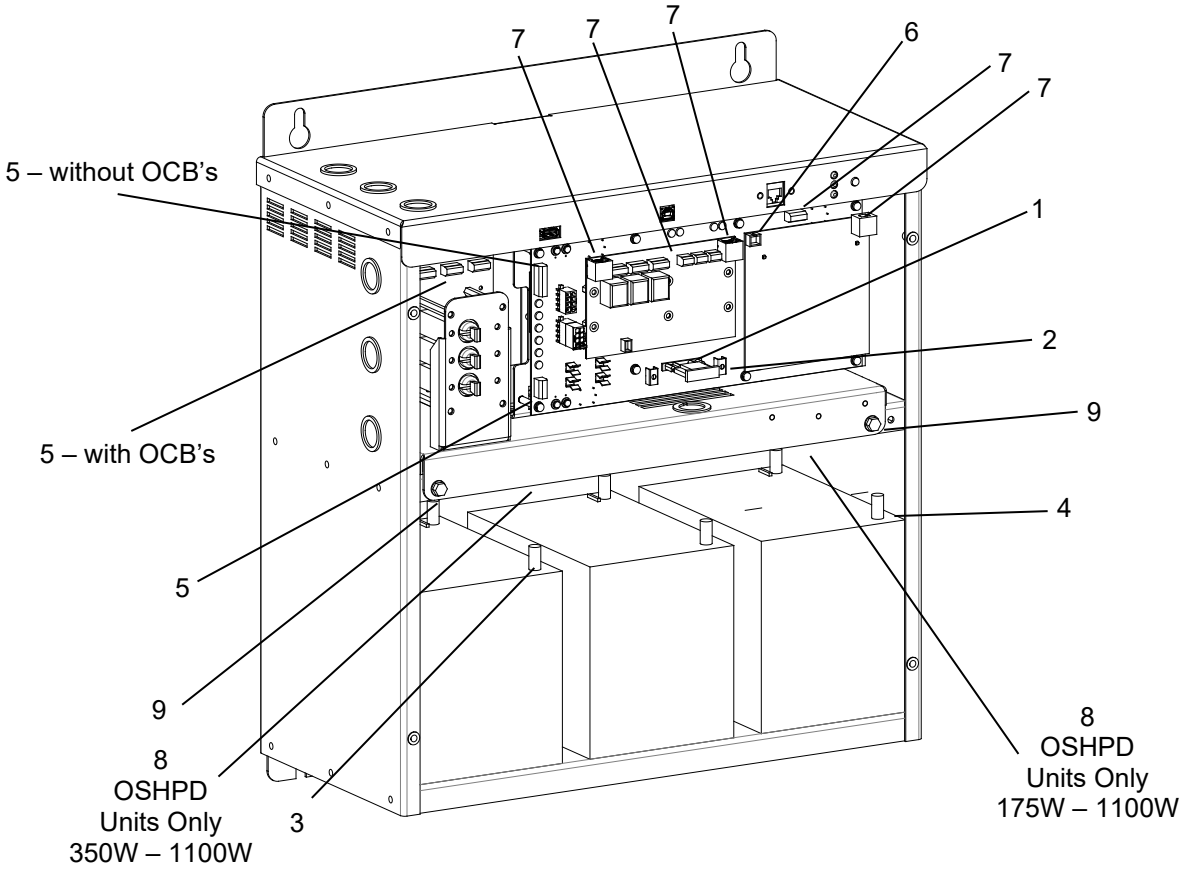

Figure 10.1 (Shown with additional options)

REMOVING T-GRID INVERTER CHASSIS FOR RMA

1. See Shutdown Procedure in Section 6. **WARNING**: For protection place a locking device on the circuit breaker that feeds the AC Voltage to the LV system.
2. Disconnect Battery Negative (-) wire from the PC Board. **CAUTION** should be used that the wire lug does not touch any part of the system. Insulate the exposed ring lug on the wire.
3. Disconnect Battery Positive (+) wire from the PC Board. **CAUTION** should be used that the wire lug does not touch the negative battery terminal. Insulate the exposed ring lug on the wire.
4. Disconnect AC Input and AC Output connections.
5. Unplug Ribbon Connector going to the PC Board.
6. If Summary Dry Contacts are being used; Disconnect wires.
7. Using a ratchet, 6” extension and a 3/8” socket remove the three nuts securing the Inverter Chassis to the cabinet. Lift Inverter Chassis out of the cabinet.

[To reinstall the Inverter Chassis; reverse the process (reconnect) and see Startup Procedure in Section 6]

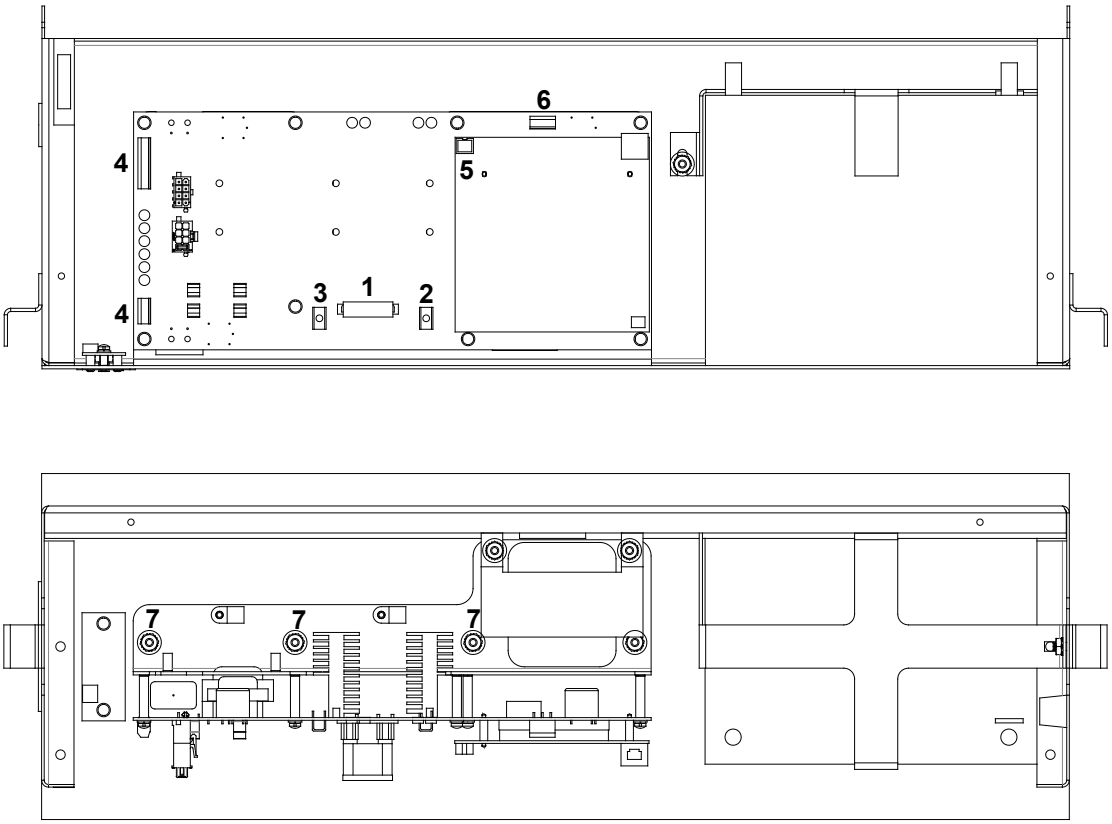

Figure 10.2 175W T-Grid

NOTES: