Single Phase Inverter System

1.5 kW – 16.7 kW

Installation Guide

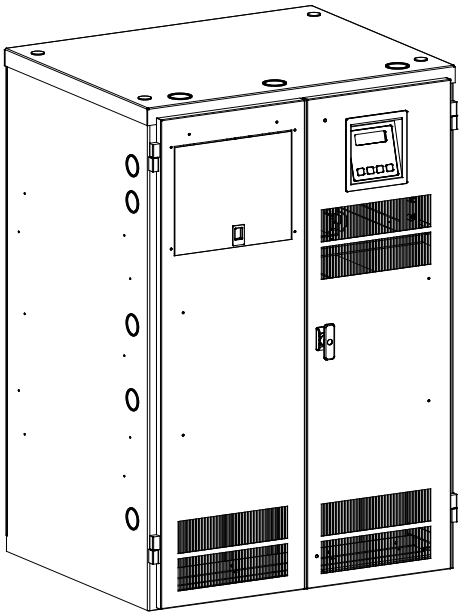

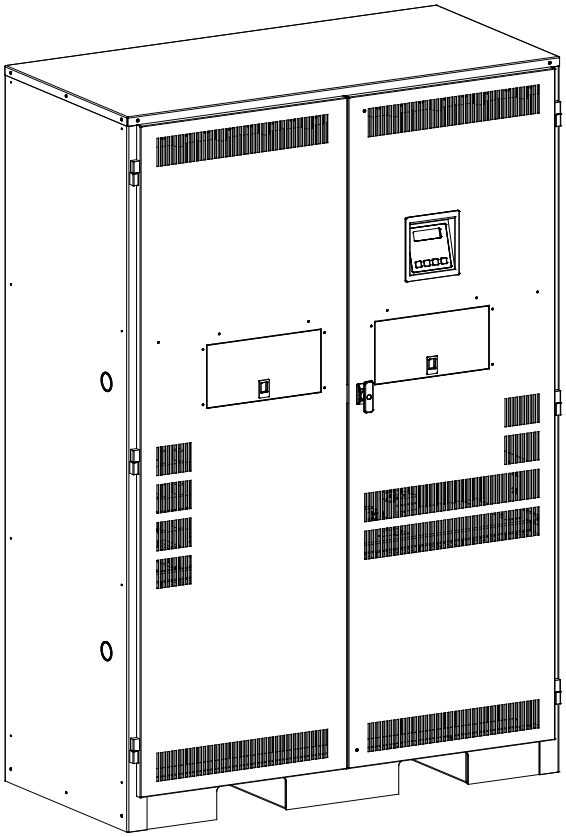

This unit contains LETHAL VOLTAGES. All repairs and service should be performed by AUTHORIZED SERVICE PERSONNEL ONLY! There are NO USER SERVICEABLE PARTS inside this unit.

IMPORTANT SAFEGUARDS

When using electrical equipment, you should always follow basic safety precautions, including the following:

1. **READ AND FOLLOW ALL SAFETY INSTRUCTIONS.**
2. **Do not install the system outdoors.**
3. **Do not install near gas or electric heaters or in other high-temperature locations.**
4. **Use caution when servicing batteries. Depending on battery type, batteries contain either acid or alkali and can cause burns to skin and eyes. If battery fluid is spilled on skin or in the eyes, flush with fresh water and contact a physician immediately.**
5. **Equipment should be mounted in locations where unauthorized personnel will not readily subject it to tampering.**
6. **The use of accessory equipment not recommended by Manufacturer may cause an unsafe condition and void the warranty.**
7. **Do not use this equipment for other than its intended use.**
8. **Qualified service personnel must perform all servicing of this equipment.**

SAVE THESE INSTRUCTIONS

The installation and use of this product must comply with all national, federal, state, municipal, or local codes that apply. If you need help, please call Service at 1-610-868-5400.

C A U T I O N

READ ENTIRE MANUAL AND REVIEW ALL DOCUMENTATION BEFORE ATTEMPTING SYSTEM INSTALLATION!

FOR SERVICE OR INSTALLATION INFORMATION:
TELEPHONE: (610) 868-5400 (24 HR. HOTLINE)
FAX: (610) 954-8227

FOR YOUR PROTECTION....

PLEASE COMPLETE AND RETURN WARRANTY REGISTRATION CARD IMMEDIATELY.

CHAPTER 1

SAFETY WARNINGS

Read the following precautions before you install the system.

IMPORTANT SAFETY INSTRUCTIONS

SAVE THESE INSTRUCTIONS. This manual contains important instructions that you should follow during installation and maintenance of the system and batteries. Please read all instructions before operating the equipment and save this manual for future reference.

DANGER

This system contains **LETHAL VOLTAGES**. AUTHORIZED SERVICE PERSONNEL should perform all repairs and service **ONLY**. There is **NO USER SERVICEABLE PARTS** inside the system.

WARNING

- Do not install the system outdoors.
- Do not install near gas or electric heaters or in other high-temperature locations.
- Use caution when servicing batteries. Battery acid can cause burns to skin and eyes. If acid is spilled on skin or in the eyes, flush with fresh water and contact a physician immediately.
- Equipment should be mounted in locations where unauthorized personnel do not readily subject it to tampering.
- The use of accessory equipment not recommended by the manufacturer may cause an unsafe condition.
- Do not use this equipment for other than intended use.
- Only qualified service personnel (such as a licensed electrician) should perform the system and battery installation and initial startup. There is a risk of electrical shock.

CHAPTER 2

INTRODUCTION

Please read this manual thoroughly before operating your safety system. Keep this manual and the system User's Guide in the folder mounted inside the unit's door.

WARNING

Only qualified service personnel (such as a licensed electrician) should perform the system and battery installation and initial startup. There is a risk of electrical shock.

Please record your unit's model number, serial number, and part number below. You can find these numbers on the label on the inside of the system's right-hand door.

Model Number _____

Serial Number _____

Part Number _____

CHAPTER 3

BEFORE INSTALLING THE UNIT

Installation Dimensions and Clearances

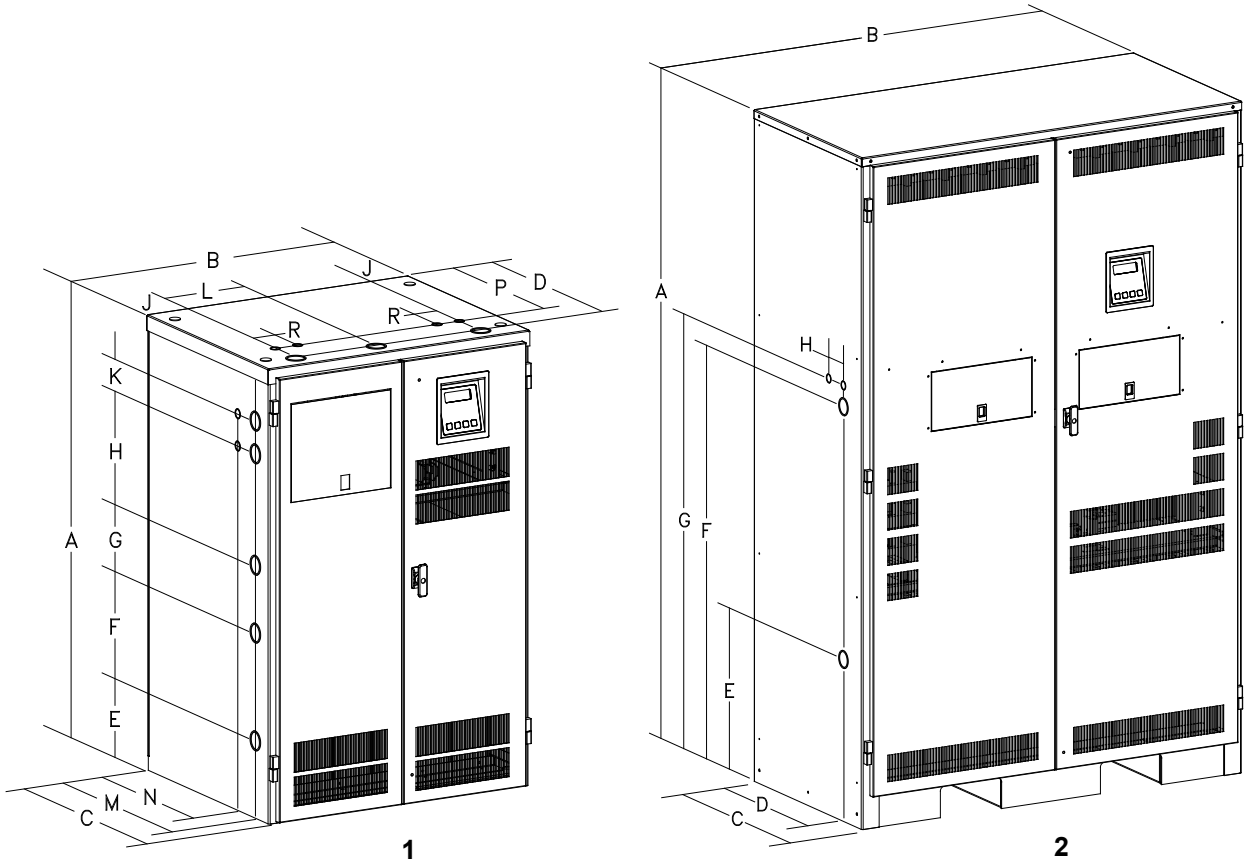

Figure 3.1 System Dimensions

Table 3.1 Dimensions

Unit	(A)	(B)	(C)	(D)	(E)	(F)	(G)	(H)	(J)	(K)	(L)	(M)	(N)	(P)	(R)
Unit #1	47” (119.60 cm)	30” (76.34 cm)	25” (63.62 cm)	22 1/8” (56.30 cm)	8” (20.36 cm)	11 ½” (29.27 cm)	7” (17.82 cm)	11 ½” (29.27 cm)	4 3/8” (11.14 cm)	3 3/8” (8.59 cm)	9 ¼” (23.54 cm)	21 ½” (54.71 cm)	18 7/8” (47.94 cm)	19 ½” (49.53 cm)	2” (5.08 cm)
Unit #2	76” (193.39 cm)	48” (122.14 cm)	25” (63.62 cm)	19 ¾”” (50.26 cm)	18 7/8” (47.94 cm)	47” (119.60 cm)	49 5/8” (126.05 cm)	2” (5.08 cm)							

Table 3.2 Required Clearances

Sides	Top	Front
0” (0.0 cm)	12” (30.5 cm)	39” (100.0 cm)

Table 3.3 Conduit Knockouts

Larger	Smaller
1 ¾” / 2” (4.45 cm / 5.08 cm)	7/8” / 1 1/8” (1.59 cm / 2.86 cm)

Location Guidelines

Keep the following guidelines in mind when choosing the location for your system and batteries:

- Verify that the environment meets the requirements in “Storage and Operating Environment” on page 7. The environment can affect the reliability and performance of both the unit and the batteries.
- Choose a permanent location for the unit. Attempting to move the unit after you have installed the batteries can damage the batteries and the cabinet.

CAUTION

Do not move the unit after you install the batteries. If you do, the unit and batteries may be damaged.

CEC requires the unit to be located in a service room. If the room is equipped with a sprinkler system, the unit must be provided with sprinkler proof covers.

The system should be connected to the emergency generator, if available.

This equipment is heavy. Refer to Table 3.4 when you choose a site to make sure that the floor can support the weight of the system, the batteries, and any other necessary equipment.

Table 3.4 System weight [in lbs. (kg)]

	System Models for 90 Minute run-time									
	1.5kw	2.25kw	3.0kw	3.75kw	5.0kw	6.0kw	8.0kw	10.0kw	12.5kw	16.7kw
Unit with Standard SLC Batteries	511 (232)	674 (305)	827 (376)	980 (445)	1168 (530)	1715 (778)	2120 (962)	2561 (1162)	3025 (1373)	3845 (1744)
Unit without Batteries	215 (97)	230 (104)	235 (107)	240 (109)	280 (127)	605 (274)	640 (290)	785 (356)	805 (366)	885 (401)
	System Models for 120 Minute run-time									
Unit with Standard SLC Batteries	674 (305)	827 (376)	980 (445)	1168 (530)	1715 (778)	2120 (962)	2561 (1162)	3025 (1373)	3845 (1744)	Consult Factory
Unit without Batteries	230 (104)	235 (107)	240 (109)	280 (127)	605 (274)	640 (290)	785 (356)	805 (366)	885 (401)	885 (401)

Receiving and Moving the Unit and the Batteries

Systems weigh several hundred pounds, (see Table 3.4; ask your sales representative for additional information). Make sure you are prepared for these weights before you unload or move the unit or the batteries. Do not install any batteries until you have permanently installed the unit and connected all conduit and wiring.

Storage and Operating Environment

Make sure you store and install the system in a clean, cool, dry place with normal ventilation and level floors.

Storage Temperature

Store the batteries (in the system) at -18 to 40°C (0 to 104°F). Batteries have a longer shelf life if they are stored below 25°C (77°F). Keep stored batteries fully charged. Recharge the batteries every 90–180 days. The system without batteries may be stored at -20 to 70°C (-4 to 158°F).

Ventilation

The air around the unit must be clean, dust-free, and free of corrosive chemicals or other contaminants. Do not place the system or batteries in a sealed room or container.

Operating Temperature

System can operate from 20° to 30°C (68° to 86°F) and up to 95% relative humidity. The batteries' service life is longer if the operating temperature stays below 25°C (77°F).

Batteries

The temperature should be near 25°C (77°F) for optimum battery performance. Batteries are less efficient at temperatures below 18°C (65°F), and high temperatures reduce battery life. Typically, at about 35°C (95°F), battery life is half of what it would be at a normal temperature of 25°C (77°F). At about 45°C (113°F), battery life is one-fourth of normal.

Make sure that heaters, sunlight, air conditioners, or outside air vents are not directed toward the batteries. These conditions can make the temperature within battery strings vary, which can cause differences in the batteries' voltages. Eventually, these conditions affect battery performance.

Do not allow tobacco smoking, sparks, or flames in the system location because hydrogen is concentrated under the vent cap of each cell of the battery. Hydrogen is highly explosive, and it is hard to detect because it is colorless, odorless, and lighter than air.

Every type of battery can produce hydrogen gas, even sealed maintenance-free batteries. The gas is vented through the vent caps and into the air, mainly when the unit is charging the batteries. The batteries produce the most hydrogen when maximum voltage is present in fully charged batteries; the batteries do not produce hydrogen during float charging. The amount of current that the charger supplies to the batteries (not the battery ampere-hour) determines how much hydrogen is produced.

High Altitude Operation

Maximum elevation is 3000m (10,000 ft). Derating on output power is 4% per 300m (1000ft) above 3000m (10,000 ft).

CHAPTER 4

INSTALLATION OVERVIEW

Figure 4.1 shows typical installations of system. Standard 1.5 kW, 2.25 kW, 3.0 kW, 3.75 kW, 5.0 kW, 6.0 kW, 8.0 kW, 10.0 kW, 12.5 kW, and 16.7 kW models **do not** have external battery cabinets.

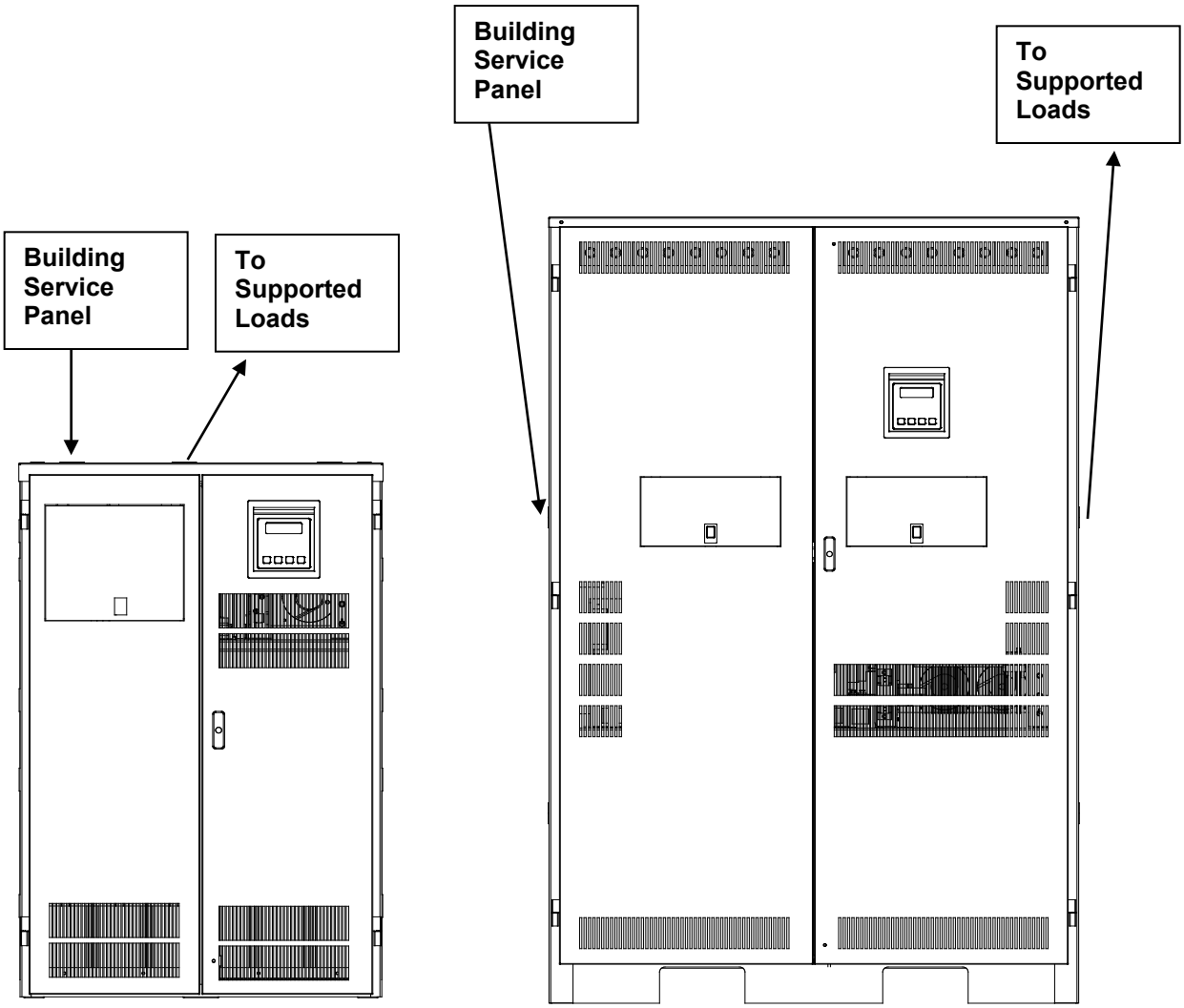

Figure 4.1 Typical Hardwired Installation

CHAPTER 5

AC INPUT & AC OUTPUT INSTALLATION

WARNING

Only qualified service personnel (such as a licensed electrician) should perform the AC installation. There is a risk of electrical shock.

Read the following cautions before you continue.

CAUTION

- Unit contains hazardous AC and DC voltages. Because of these voltages, a qualified electrician must install the system, AC line service, and batteries. The electrician must install the AC line service according to local and national codes and must be familiar with batteries and battery installation.
- Before you install, maintain, or service the unit, always remove or shut off all sources of AC and DC power and shut off the system. You must disconnect AC line input at the service panel and turn off the Installation Switch (S1), the Main AC Input Circuit Breaker (CB1), and the Battery Fuse(s) to make sure the unit does not supply output voltage.
- Whenever AC and/or DC voltage is applied, there is AC voltage inside the unit; this is because the unit can supply power from AC line or from its batteries. To avoid equipment damage or personal injury, always assume that there may be voltage inside the unit.
- Remove rings, watches, and other jewelry before installing the AC wiring. Always wear protective clothing and eye protection and use insulated tools when working near batteries. Whenever you are servicing an energized unit with the inside panel open, electric shock is possible; follow all local safety codes. TEST BEFORE TOUCHING!
- To reduce the risk of fire or electric shock, install the unit and its batteries in a temperature and humidity-controlled indoor area free of conductive contaminants. See page 7 for operating environment specifications.

1. Open the unit's doors. Make sure the installation switch and the input circuit breaker are off, and the battery fuse(s) removed.
2. Look at the ID label on the inside right door. Write down the following information:

   Input Voltage: _____
   Output Voltage: _____
3. Now, make sure the input and output voltages are what you need. **Remember that the system provides single-phase power only.**
   - Does the input voltage available for the system at the AC service panel match the input voltage shown on the unit's ID label?

     Service Panel Voltage = _____ Input Voltage __*Yes* /__No
   - Does the output voltage on the ID label match the voltage your loads (protected equipment) need?

     Load Voltage = _____ Output Voltage __Yes/__No

     If you answered NO to either of the preceding questions, **call SERVICE**.

4. Now, use the information you wrote down in Step 2 to find the correct circuit breaker for the service panel that is for your system.

Table 5.1 Recommended Circuit Breaker for Maximum Input Current

System	Input Voltage (Vac)	Max. Current	Recommended Circuit Breaker
1.5 kW	120V	16 amps	20A
1.5 kW	208V	9 amps	15A
1.5 kW	240V	8 amps	10A
1.5 kW	277V	7 amps	10A
2.25 kW	120V	24 amps	30A
2.25 kW	208V	14 amps	20A
2.25 kW	240V	12 amps	15A
2.25 kW	277V	11 amps	15A
3.0 kW	120V	32 amps	40A
3.0 kW	208V	18 amps	25A
3.0 kW	240V	16 amps	20A
3.0 kW	277V	14 amps	20A
3.75 kW	120V	39 amps	50A
3.75 kW	208V	23 amps	30A
3.75 kW	240V	20 amps	25A
3.75 kW	277V	17 amps	25A
5.0 kW	120V	52 amps	70A
5.0 kW	208V	30 amps	40A
5.0 kW	240V	26 amps	35A
5.0 kW	277V	23 amps	30A
6.0 kW	120V	63 amps	80A
6.0 kW	208V	36 amps	45A
6.0 kW	240V	32 amps	40A
6.0 kW	277V	27 amps	35A
8.0 kW	120V	84 amps	100A
8.0 kW	208V	48 amps	60A
8.0 kW	240V	42 amps	50A
8.0 kW	277V	36 amps	45A
10.0 kW	120V	104 amps	125A
10.0 kW	208V	60 amps	80A
10.0 kW	240V	52 amps	70A
10.0 kW	277V	45 amps	60A
12.5 kW	120V	131 amps	175A
12.5 kW	208V	75 amps	90A
12.5 kW	240V	65 amps	80A
12.5 kW	277V	57 amps	70A
16.7 kW	120V	174 amps	225A
16.7 kW	208V	100 amps	125A
16.7 kW	240V	87 amps	110A
16.7 kW	277V	76 amps	100A

WARNING: THE EXTERNAL INPUT CIRCUIT BREAKER PROTECTING THE SYSTEM MUST BE A "MOTOR START", DELAYED TRIP TYPE. * IF INPUT AUTO OR INPUT ISOLATION TRANSFORMER WAS ADDED TO THE SYSTEM. CONSULT FACTORY. THIS IS DUE TO MAGNETIC INRUSH CURRENT DRAWN DURING APPLICATION OF AC POWER.

5. Write down the circuit breaker value that applies to your system from Table 5.1:

_____

6. Now, look at Table 5.2 below, and use the notes below to find the proper gauge wire for the recommended circuit breaker recorded in step 5.

Table 5.2 Recommended Minimum Wire Sizes

Read These Important Notes!	For this Input Circuit Breaker Size...	Use this Size 90°C Copper Wire	
		AWG	Mm2
This table lists the AWG and mm2 wire size for each circuit breaker size. The minimum recommended circuit breaker sizes for each model and voltage application are listed in Table 5.1. The temperature rating of conductor must not be less than 90° C wire. Based on the ampacities given in Tables 310-16 of the National Electrical Code, ANSI/NFPA 70-1993 (Table 2 of the CEC), and NEC article 220 (CEC Section 4). Circuit conductors, must be the same size (ampacity) wires and equipment-grounding conductors must meet Table 250-95 of the National Electrical Code. Code may require a larger wire size than shown in this table because of temperature, number of conductors in the conduit, or long service runs. Follow local code requirements.	10, 15, 20	12	3.31
	25, 30	10	5.26
	35, 40, 45	8	8.36
	50, 60	6	13.30
	70, 80	4	21.15
	90, 100	2	33.62
	110	1	42.11
	125	1/0	53.49
	150, 175	3/0	67.43
	225	4/0	74.40

7. The input circuit breaker in the input service panel provides the means for disconnecting AC to the unit. Only authorized persons shall be able to disconnect AC to the unit [see NEC 700-20 and 700-21(CEC Section 46)]. If you are using the input circuit breaker to disconnect AC, you must make sure that only authorized persons have control of the circuit breaker panel to meet the requirements of NEC 700-20 (CEC Section 46).

8. Read the following caution, before removing conduit knockouts.

CAUTION

To prevent electrical shock or damage to your equipment, the Installation Switch (S1), the Main AC Input Circuit Breaker (CB1), and the circuit breaker at the input service panel should all be turned off. The Main DC Battery Fuse and the Battery Disconnect Fuse(s) (if you have one) should be removed.

9. Remove knockouts for AC Input and AC Output in the top or left and right side of the system (See figure 4.1). AC input conductors and AC output conductors must be installed in separate conduits, and emergency and non-emergency output circuits must be installed in separate conduits.

CAUTION

Do not drill the cabinet; drill filings may damage the unit and keep it from operating. If you need larger knockouts, use a chassis punch to punch out the appropriate knockout. Do not create additional knockouts.

10. Install the conduit. You must run the AC input service conductors and AC output conductors through separate conduits. Emergency output conductors and non-emergency output conductors must also be run through separate conduits. Emergency output circuits shall be installed in dedicated conduit systems and not shared with other electrical circuits as described in NEC 700-9(b) [CEC Section 47-108].

The next step explains where to make the AC connections to the system.

INSTALLING AC INPUT WIRES:

11. Connect AC utility from the service panel to the system's terminal block labeled **"INPUT"**.
    For 2-wire input: connect hot wire to the input block marked **"Line"**, connect the common wire to the input block marked **"Neutral"** and connect the ground wire to the Green/Yellow terminal block marked **"Ground"**.
    For 3-wire input: connect each hot wire to each of the input block positions marked **"Line"**, connect the ground wire to the Green/Yellow terminal block marked **"Ground"**.

INSTALLING AC OUTPUT WIRES:

12. Connecting load wires without system distribution circuit breakers – connect load wires to the system's terminal block labeled **"OUTPUT"**. Connect hot wire(s) to the output block marked **"Nor. On"**, the common wire(s) to the output block marked **"Neutral"** and the ground wire(s) to the Green/Yellow terminal block marked **"Ground"**. Emergency only load hot wires must be connected to the optional circuit on the output terminal block labeled **"Nor. Off"**.

Connecting load wires with system distribution circuit breakers – connect the hot wire from each branch circuit to a circuit breaker, connect the common wire from each branch circuit to the neutral connection bar and connect ground wire to the Green/Yellow terminal block at the output for 1.5KW – 5.0KW systems or the ground connection bar for 6.0KW – 16.7KW systems.

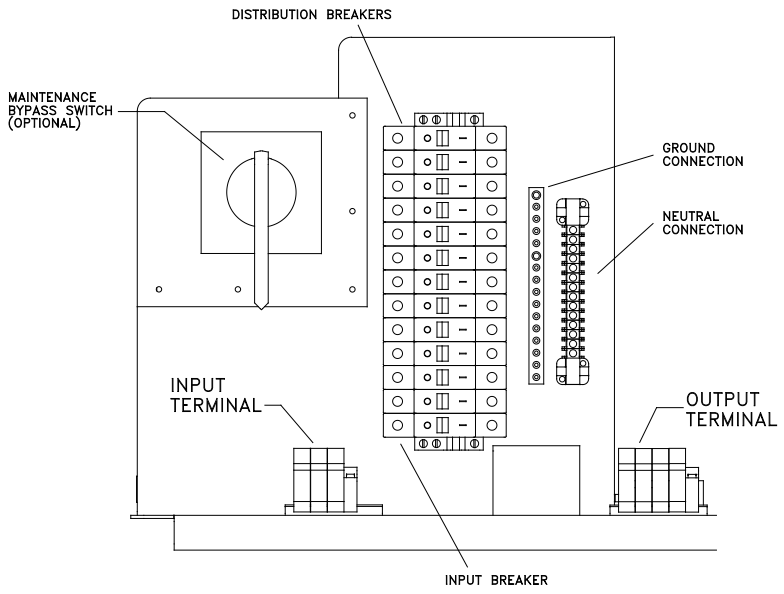

Figure 5.1 AC Connections for 1.5 k W– 5.0 kW systems

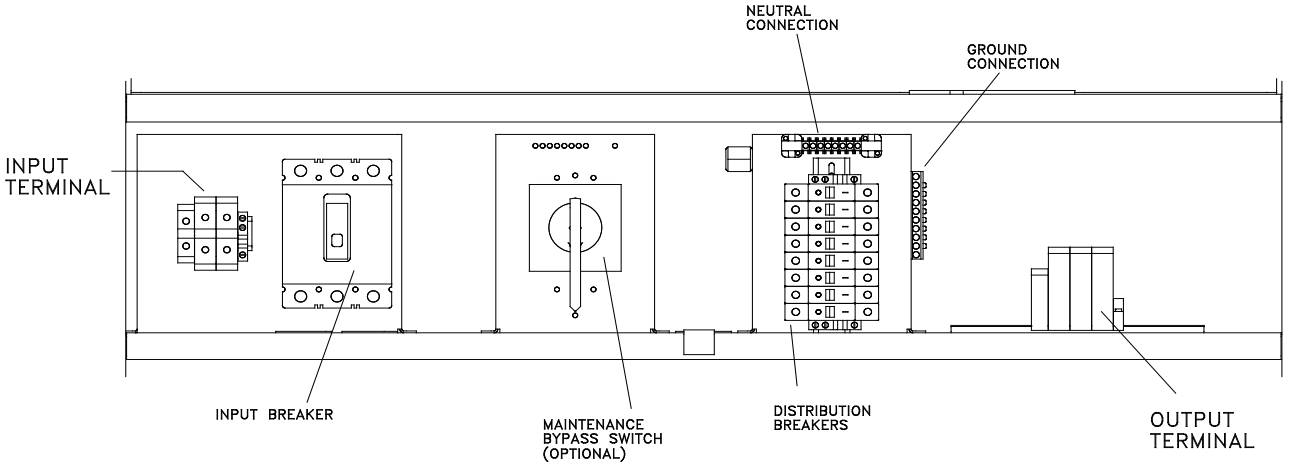

Figure 5.2 AC Connections for 6 kW – 16.7 kW systems (5.0 kW system for 120 Minute run-time)

CHAPTER 6

INSTALLING BATTERIES AND DC WIRING

WARNING

Only qualified service personnel (such as a licensed electrician) should perform the battery and DC wiring installation. There is a risk of electrical shock.

This section explains how to install system batteries, fuses, and cables. For all models, you must install the batteries in the system cabinet. An electrician who is familiar with battery installations and applicable building and electrical codes should install the batteries.

WARNING

The batteries that will need to be installed in this system could cause you harm or severely damage the electronics if proper precautions are not followed. Batteries connected in series parallel configuration could produce lethal voltages with unlimited current. All batteries should be inspected for damage prior to installation. Never install a battery that is leaking electrolyte. Battery terminals should be cleaned with a wire brush to remove any oxidation. All tools should be insulated. Rubber gloves and safety glasses are recommended. **IN THIS SYSTEM BATTERY NEGATIVE IS TIED TO GROUND INSIDE THE INVERTER.** This means that the cabinet and shelves are at ground potential as soon as negative connections are made to the batteries. It is strongly recommended to make all negative connections to the batteries the last step to prevent any chance of shorting battery positive to ground. With the DC fuse(s) removed, make connections to battery positive first, working your way towards battery negative. Leave individual strings of batteries open at the last battery negative until all batteries are installed. Then connect each string's negative.

Safety Instructions

IMPORTANT SAFETY INSTRUCTIONS

SAVE THESE INSTRUCTIONS
This section contains important instructions that a qualified service person should follow during installation and maintenance of the system and batteries. ONLY a qualified service person should work with the batteries.

CAUTION

Full voltage and current are always present at the battery terminals. The batteries used in this system can produce dangerous voltages, extremely high currents, and a risk of electric shock. They may cause severe injury if the terminals are shorted together or to ground (earth). You must be extremely careful to avoid electric shock and burns caused by contacting battery terminals or shorting terminals during battery installation. Do not touch un-insulated battery terminals.

A qualified electrician familiar with battery systems and required precautions must install and service the batteries. Any battery used with this unit shall comply with the applicable requirements for batteries in the standard for emergency lighting and power equipment, UL 924 (Canada's National Building Code). Cabinets are designed to be used with, and batteries must be replaced with, manufacturer battery number BAT-CG12105 or a manufacturer approved equivalent (see the battery wiring diagram that came with the battery cables). If you substitute batteries not supplied by manufacturer, the unit's UL (cUL) listing is void and the equipment may fail. Installation must conform to national and local codes as well. Keep unauthorized personnel away from batteries.

The electrician must take these precautions:

Wear protective clothing and eyewear. For battery systems >48vdc, wear rubber gloves and boots. Batteries contain corrosive acids or caustic alkalis and toxic materials and can rupture or leak if mistreated. Remove rings and metal wristwatches or other metal objects and jewelry. Don't carry metal objects in your pockets where the objects can fall onto the batteries or into the system.

Tools must have insulated handles and must be insulated so that they do not short battery terminals. Do not allow a tool to short a battery terminal to another battery terminal or to the cabinet at any time. Do not lay tools or metal parts on top of the batteries, and do not lay them where they could fall onto the batteries or into the cabinet.

Install the batteries as shown on the battery-wiring diagram provided with the system. When connecting cables, never allow a cable to short across a battery's terminals, the string of batteries, or to the cabinet.

Align the cables on the battery terminals so that the cable lug does not contact any part of the cabinet even if the battery is moved. Keep the cable away from any sharp metal edges.

CAUTION

Install the battery cables so the system doors cannot pinch them.

If you are replacing batteries or repairing battery connections, follow the procedure in the system user's Guide to shut down your system and remove both AC and DC input power.

Before Installing the Batteries

Tools

CAUTION

Always use insulated tools when you work with batteries. Always torque connections to the manufacturer's recommendations.

When you work with system batteries, you need the following tools. The tools must be insulated so they do not short battery terminals to the cabinet. Wear the safety equipment required by local code whenever the doors are open and whenever you are working on batteries. Other tools may be necessary for optional batteries.

- Digital volt-ohm meter
- 7/16" socket wrench
- 3" extension socket
- Ratchet
- Wire brush
- Electrical tape
- Conductive grease or petroleum jelly
- Brush (to apply grease or petroleum jelly to terminals)
- Safety equipment required by local codes
- Torque wrench calibrated in inch-pounds or Newton-meters
- Safety glasses with side shields

Battery Voltage (vdc)

Models	1.5k	2.25k	3.0k	3.75k	5.0k	6.0k	8.0k	10.0k	12.5k	16.7k
Battery Volts for 90 Minute Systems	48v	72v	96v	120v	144v	180v	240v	144v	180v	240v
Battery Volts for 120 Minute Systems	72v	96v	120v	144v	180v	240v	144v	180v	240v	240v

Battery Cable Sizing

The battery cable or wire used is No. 6 AWG (13.30 mm^2) for all applications:

DC Disconnect

Systems have a Main Battery Fuse (F1) inside the cabinet; this fuse lets you remove DC power from the batteries. Systems (10 KW – 16.7KW) have a fuse in line with the positive cable leaving each battery string.

Installing and Connecting the Batteries

Battery Wiring Diagram

You should have received a battery-wiring diagram with your system. This battery-wiring diagram shows how you should install the batteries, make terminal, and fuse connections. Use the diagram as you follow the steps below.

Location

The system batteries belong inside the unit. Before you start installing the batteries, you must install the system in its permanent location. If you have not already done this, see “Location Guidelines” on page 6 to choose a location.

CAUTION

To prevent damage to your equipment, do not move the system after the batteries are installed.

To make sure a location is acceptable for the system, review the requirements in Chapter 3.

Electronics Cabinet Battery Block Connections

Do not connect any battery cables at this time. In the following procedure, you should only make connections to the electronics cabinet’s battery block. Use the battery-wiring diagram shipped with the system as you follow these steps.

1. Find the positive battery cable that connects to the battery block. At the bare end of the cable, strip off 0.5” (1.3 cm) of insulation. Connect the cable to the battery block. Tighten the connection as shown on the battery-wiring diagram.
2. Find the negative battery cable that connects to the battery block. At the bare end of the cable, strip off 0.5” (1.3 cm) of insulation. Connect the cable to the battery block. Tighten the connection as shown on the battery-wiring diagram. **Insulate the other end of the cable.**
3. If your unit has only has one battery string, go on to the Arranging the Batteries section.

   Repeat step 1 and 2 for units with 2 strings (10 kW, 12.5 kW, and 16.7 kW systems).

Arranging the Batteries

NOTE *As you arrange the batteries, you must be wearing the required safety equipment.*

Arrange the batteries in the cabinet only as shown in the battery-wiring diagram. This arrangement is designed to maximize airflow around the batteries. The cabinets are designed so that battery cases should never touch. Air should be free to circulate. Clean the entire surface of all battery terminals with the wire brush before you install the batteries to create good contact points.

Load the batteries into the system. Starting with the bottom shelf, load one shelf at a time.

CAUTION

Never install the batteries in an airtight enclosure.

Connecting the Cables Between Batteries

When you make battery terminal connections, use the torque wrench to tighten the battery terminal connections securely. You can find out what torque value to use by finding the battery number on the front of the battery. Then, use Table 6.1 to find the torque value for that battery.

Table 6.1 Battery Torque

Battery Type	Torque
BAT-CG12105 or SL-12105	Torque to 120 in lbs. (13.6 Nm)
BAT-CG12105A or SL-12105M	Torque to 120 in lbs. (13.6 Nm)
BAT-CG12105B	Torque to 55 in lbs. (6.5 Nm)
BAT-CG12105E or 12AVR100-3ET	Torque to 100 in lbs. (11.3 Nm)
BAT-CG12105G	Torque to 100 in lbs. (11.3 Nm)
BAT-CG12105H or FT12-105	Torque to 110 in lbs. (12.4 Nm)

Now, follow these steps to connect the cables:

1. Using the battery-wiring diagram, determine which batteries belong to each battery string.

NOTE: *For standard 90-minute runtimes, 1.5 kW, 2.25 kW, 3.0 kW, 3.75 kW, 5.0 kW, 6.0 kW and 8.0 kW models have only one battery string. 10.0 kW, 12.5 kW, and 16.7 kW models have two battery strings.*

For 120-minute runtimes, 8.0KW model has two battery strings.

2. Clean the cable connectors with the wire brush before you make the battery connections.

NOTE *As you carry out the following step, use these guidelines:*
If you are using conductive grease, apply a thin coating of high-temperature conductive grease on each post and every cable connector before you assemble and torque the connection to slow corrosion.
If you use nonconductive grease like petroleum jelly, do not apply any grease before you make the connections and torque them. Instead, make the connection first; then, torque it to the value shown in Table 6.1. After you make the connection, apply a coating of the nonconductive grease to the hardware at the battery terminals.

3. In each battery string, connect the battery cables between the batteries as shown in the battery-wiring diagram (positive terminal to negative terminal). Torque the connections to the value shown for your battery in Table 6.1.
4. Connect the battery cables from one shelf to the next as shown on the battery-wiring diagram.
5. Connect the fuse block to the positive of the battery as shown on the battery-wiring diagram.

CAUTION

Hazardous voltage is present! System batteries are high current sources. These batteries can produce dangerous voltages, extremely high currents, and a risk of electric shock.

6. Install only the battery fuses (10.0KW – 16.7KW). Next, use the voltmeter to check the DC voltage between the positive (+) position on the battery block inside the electronics cabinet and the unconnected battery negative terminal. This voltage should be approximately the battery voltage record on the unit ID label. If it is greater than + or – 5% Vdc, review the battery wiring diagram. Correct any wiring errors and recheck the DC voltage; do not go on until your measurement is within + or – 5% Vdc. If the measurement is too high and you cannot find the cause of the problem, call SERVICE.

CAUTION

If you do not verify that voltage and current direction are correct, the equipment may fail.

Connecting the Negative Battery Cable(s) to the Battery String(s)

Remove the insulation from the cable that was put on in step 2 of “Electronics cabinet battery block connections”. Connect the cable to the battery (-) negative. Repeat this step for systems with 2 strings.

Replacing the Batteries

CAUTION

A battery can present a risk of electrical shock and high short circuit current. A qualified electrician familiar with battery systems should service the batteries.

Review all the safety instructions at the beginning of this chapter before you replace any batteries.

Use the Same Quantity and Type of Battery

CAUTION

You must use the same quantity and type of battery. Substituting batteries not supplied by manufacturer voids the UL (CUL) listing and may cause equipment damage.

To ensure continued superior performance of your system and to maintain proper charger operation, you must replace the batteries in the system with the same number of batteries. These batteries must be the same types as the original batteries. The replacement batteries should have the same voltage and ampere-hour rating as the original batteries.

Handle Used Batteries with Care!

Assume that old batteries are fully charged. Use the same precautions you would use when handling a new battery. Do not short battery terminals or the battery string with a cable or tool when you disconnect the batteries! Batteries contain lead. Please dispose of old batteries properly.

CAUTION

Do not dispose of batteries in a fire because the batteries could explode. Do not open or mutilate batteries. Released electrolyte is harmful to the skin and eyes. It may be toxic.

Dispose of Batteries Properly

CAUTION

Batteries contain lead. Many state and local governments have regulations about used battery disposal. Please dispose of the batteries properly.

CHAPTER 7

TURNING ON THE SYSTEM AND SETTING PARAMETERS

Several parameters in the system software determine when and how your system conducts the automatic monthly and annual tests. Refer to “User Setup” in the “Front Panel Display” chapter of the system user’s Guide for a description of each test.

Starting the Unit

Before you can set the parameters, you must start the system.

WARNING

Verify that the system AC Input Circuit Breaker and Installation Switch are off.

1. Turn on the AC input at the building service panel; ensure that the systems input breaker (CB1) is off.
2. Locate the DC Pre-charge Switch (S2), see figure 7.1 or figure 7.2 or figure 7.3; press it for five seconds; then, install the main battery fuse (F1) inside the electronics cabinet.
3. Turn on the System AC input circuit breaker (CB1). (See figure 5.1 or figure 5.2)
4. Turn on the Installation Switch (S1). Leave the loads (protected equipment) off. Unit will run on batteries, then transfer to normal mode.

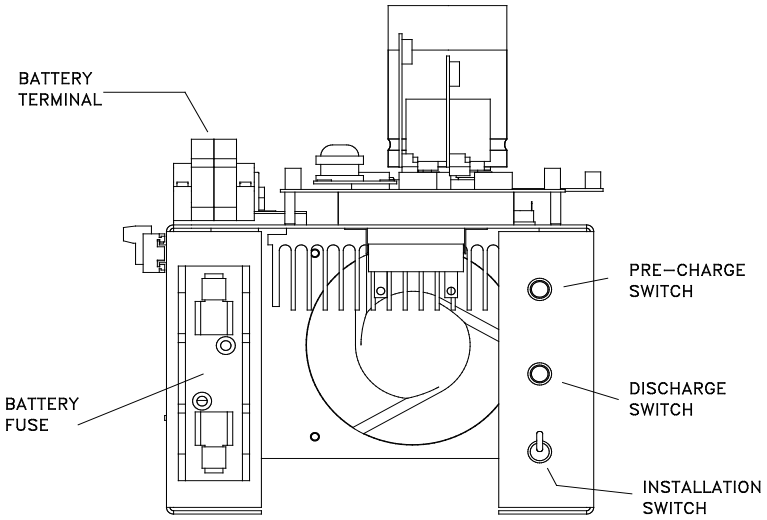

Figure 7.1 Battery Fuse, DC Pre-charge Switch & Installation Switch (1.5 kW – 5.0 kW)

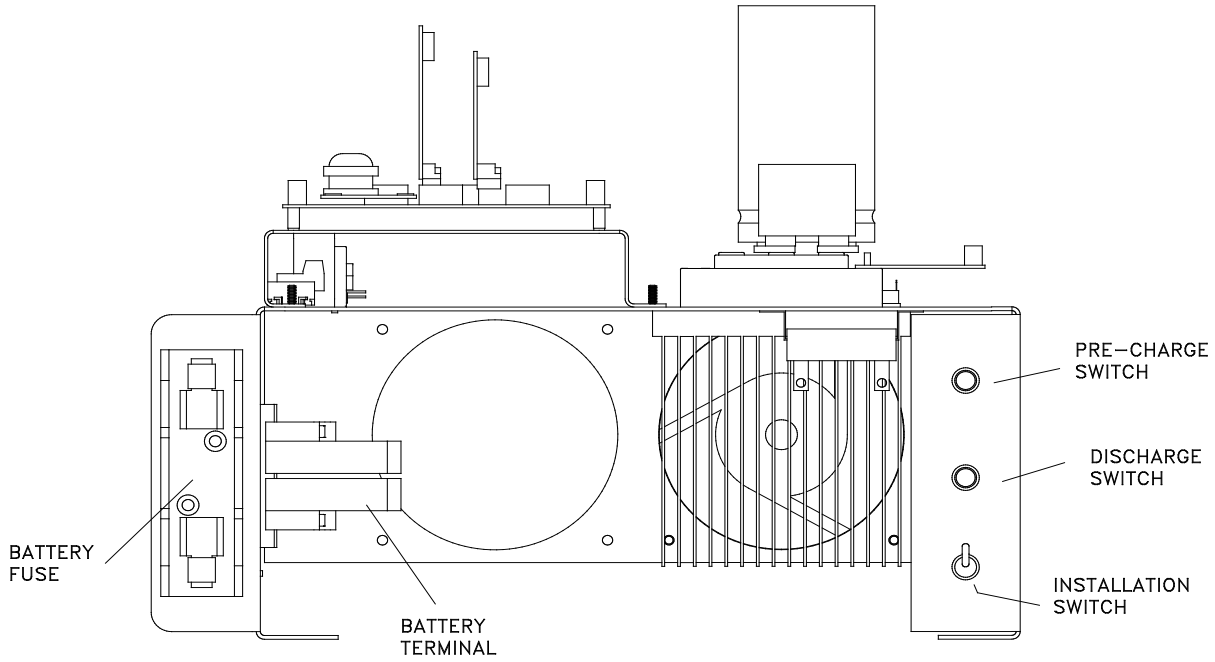

Figure 7.2 Battery Fuse, DC Pre-charge Switch & Installation Switch (6 kW – 8 kW)
(5 kW System for 120 Minute run-time)

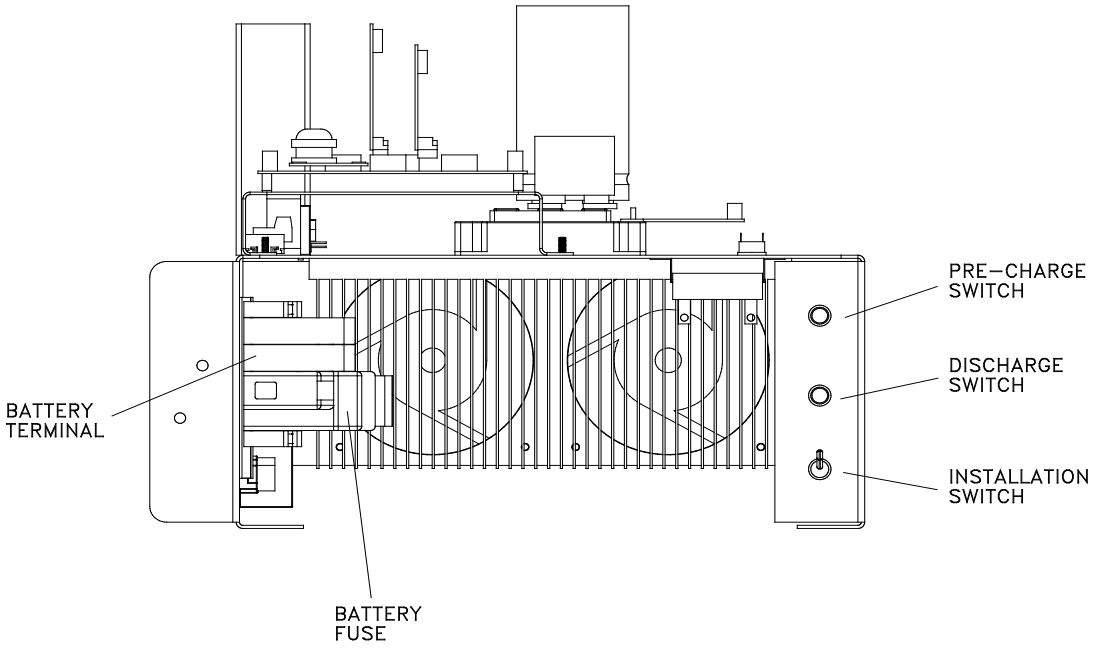

Figure 7.3 Battery Fuse, DC Pre-charge Switch & Installation Switch (10 kW – 16.7 kW)
(8 kW System for 120 Minute run-time)

FRONT PANEL DISPLAY

The Front Panel Display assembly consists of a 4 x 20 vacuum fluorescent display and a 4-button keypad. The 4 buttons can navigate through all the menus by using the left and right arrow keys, the ENTER and the ESCAPE.

The default menu will scroll between the status screen and the Identification/Date-Time screen. To view the other menu options from the default screen, press the **ENTER** key, and then press the left or the right arrow key to go to the desired menu.

The Menu's available are Meter, Test Log, Event Log, Alarm Log, User Setup, Factory Setup, Status, System Information, and Test Mode.

Once the desired menu has been reached, press the **ENTER** key to gain access to this menu. Once into the menu, use the left or right arrow key to scroll to different functions within the menu. Press the **ENTER** key again to gain access to the desire function. To exit, press the **ESCAPE** key until the desired level has been reached. (See figure 7.4)

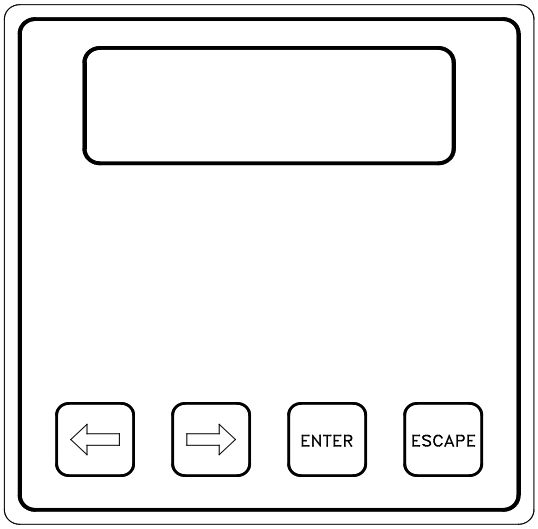

Figure 7.4 Front Panel Display

Control Panel Keypads

Table 7.1 Keypad Functions

Key Name	Description
Enter (Blue)	Pressing this key will view menus.
Escape (Black)	Pressing this key will exit out of menus and return to the Identification/Date-Time screen.
[◄] (Red)	This key functions as Left scroll key.
[►] (Red)	This key functions as Right scroll key.

Meter Functions

To get to the meter functions from the default screen, press the **ENTER** key, scroll to the METER menu using the left or the right arrow key, then press the **ENTER** key again. Use left or the right arrow key to view the meter function desired.

Table 7.2 Meter Functions

Function	Description
Voltage Input	Measures the AC Input Voltage to the Inverter.
Voltage Output	Measures the AC Output Voltage from the Inverter.
Current Output	Measures the AC Output Current from the Inverter. If there are Normally Off loads connected, it will read the sum of Normally On and Normally Off outputs.
Battery Voltage	Measures DC Battery Voltage.
Battery Current	Measures the DC Battery Current. When in charge mode, the current will be positive. When in Inverter mode, the current will be negative.
Battery Temperature	Optional feature – measures temperature at the battery.
Internal Temperature	Measures the ambient temperature inside the system.
Inverter Minutes	Indicates the total minutes the system has run on inverter.
System Days	Indicates the total days the system has been on-line.
VA Output	Indicates the AC Volts-Amps of the Inverter output.
Inverter Watts	Indicates the DC Watts (Battery Power) the Inverter is processing.

Test Log

To get to the Test log menu from the default screen, press the **ENTER** key, scroll to the Test log menu using the left or right arrow key, then press the **ENTER** key again. Use the left or right arrow key to view the test desired, and the press the **ENTER** key for more information.

The Test log indicates the Date, Time and Duration of the test. It also indicates if it was a monthly or yearly test, and it records the output voltage, the output current, the ambient temperature, and if there were any alarm conditions.

The numbers of tests that can be captured in the test log are 75. The format is first in is first out so; test number one is the most recent test.

Event Log

To get to the Event log menu from the default screen, press the **ENTER** key, scroll to the Event log menu using the left or right arrow key, then press the **ENTER** key again. Use the left or right arrow key to view the event desired, and then press the **ENTER** key for more information.

The Event log is identical to the test log in parameters it stores. The Event log captures data every time there is a transfer from utility power to battery power. The numbers of events that can be captured in the event log are 75. The format is first in is first out so; event number one is the most recent event.

Alarm Log

To get the Alarm log menu from the default screen, press the **ENTER** key, scroll to the alarm log menu using the left or right arrow key, then press the **ENTER** key again. Use the left or right arrow key to view the alarm desired, and then press the **ENTER** key for more information.

Any alarm that has occurred is captured in the Alarm log. The numbers of alarms that can be captured in the alarm log are 75. The format is first in is first out so; alarm number one is the most recent alarm.

Alarms

To get to the Alarm menu from the default screen, press the **ENTER** key, scroll the Alarm menu using the left or right arrow key, then press the **ENTER** key again.

The alarm menu displays all present alarms. If there are no alarms, the display screen will indicate no alarms.

User Setup

To get to the User Setup menu from the default screen, press the **ENTER** key, scroll to the User Setup menu using the left or right arrow key, then press the **ENTER** key again. The display will prompt for a password.
****** The password is left arrow, right arrow, left arrow, and right arrow. ******

Once the password is entered, the user has access to change the following functions:
Date, Time, Month Test, Year Test, Low VAC, High VAC, Near Low Battery, Low Battery, High Temp, Load Reduction Current.

Date
The parameters are Day of Week, Month, Day, and Year.
To change any of the parameters, use the left or right arrow key depending if you want to increase or decrease. Once the parameter is correct, press the **ENTER** key and the next parameter can be changed.

Time
The parameters are Hour and Minute. The 24-hour standard is used so 2:00 PM would be 14 hours. Use the left or right arrow key to change the parameters and the **ENTER** key to scroll between parameters.

Month Test, Year Test
The parameters are Date, Time (Hours and Minutes) use the left or right arrow key to change the parameters and the **ENTER** key to scroll between parameters.

Low VAC, High VAC, Near Low Battery, Low Battery, High Temperature
Parameters are set in Volts AC, Volts DC, and Degrees Centigrade respectively.

Use the left or right arrow key to turn on or off this alarm. When the alarm is turned on, a number will appear. To change the number, press the **ENTER** key and then use the left or right arrow key. Once the desired number is reached, press the **ENTER** key and this will return to the top-level menu.

Table 7.3 Near Low Battery Fault Chart

DC Voltage	Near Low Battery
48VDC	43VDC
72VDC	65VDC
96VDC	86VDC
120VDC	108VDC
144VDC	130VDC
180VDC	162VDC
240VDC	216VDC

Load Reduction Current
Parameters are set in Amps AC.
Use the same technique as the above alarms for modification.
Load Reduction Current is a useful diagnostic tool that will automatically generate a fault when the output current is 10 percent higher or lower than the set-point number.

Status

Indicates the Status of the machine – Line Present, Battery Charging, Ready, Battery Power, and if any faults are present.

System Information

Indicates Model Number, Serial Number and Current Software Revision Level of the system.

Test Mode

To initiate a Test and cause the inverter to run on battery power.

Completing the Installation

Close the doors and lock the cabinet. You have finished installing the system. Follow the steps in the Startup and Warranty Validation form to test the installation and startup the system for the first time. After you complete this form, return it to the manufacturer to validate the warranty.

Keep the System Installation Guide and the User's Guide in the folder attached to the inside of the system door.