AMER-N4EX SERIES
EXIT SIGN INSTALLATION INSTRUCTIONS - AC ONLY MODEL

CAUTION: For safety and proper operation, read and follow instructions carefully before installation.

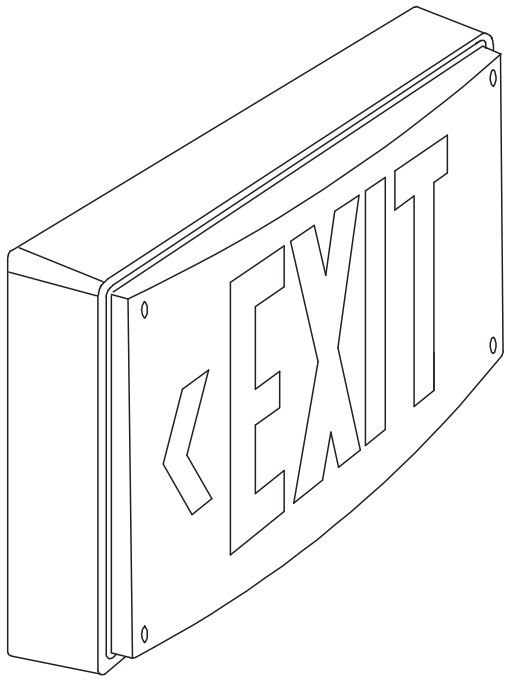

IMPORTANT SAFEGUARDS

1.READ AND FOLLOW ALL SAFETY INSTRUCTIONS

2. Before wiring to power supply, turn off electricity at fuse or circuit breaker.
3. Disconnect A.C. power and Power Plug before servicing.
4. Refer to wiring diagram sheet for proper connections.
5. Be sure unit is wired to AC power before power plug is connected.
6. All servicing should be performed by qualified personnel.
7. Consult your local building code for approved wiring and installation.
8. Do not use outdoors.
9. Do not mount near gas or electric heater.
10. Fixture must be grounded to avoid potential electric shock.
11. Equipment should be mounted in location and at heights where it will not readily be subjected to tampering by unauthorized personnel.
12. The use of accessory equipment not recommended by the manufacturer may cause an unsafe condition.
13. Do not use this equipment for other than intended use.

SAVE THESE INSTRUCTIONS

AMER-N4EX
INSTALLATION INSTRUCTIONS

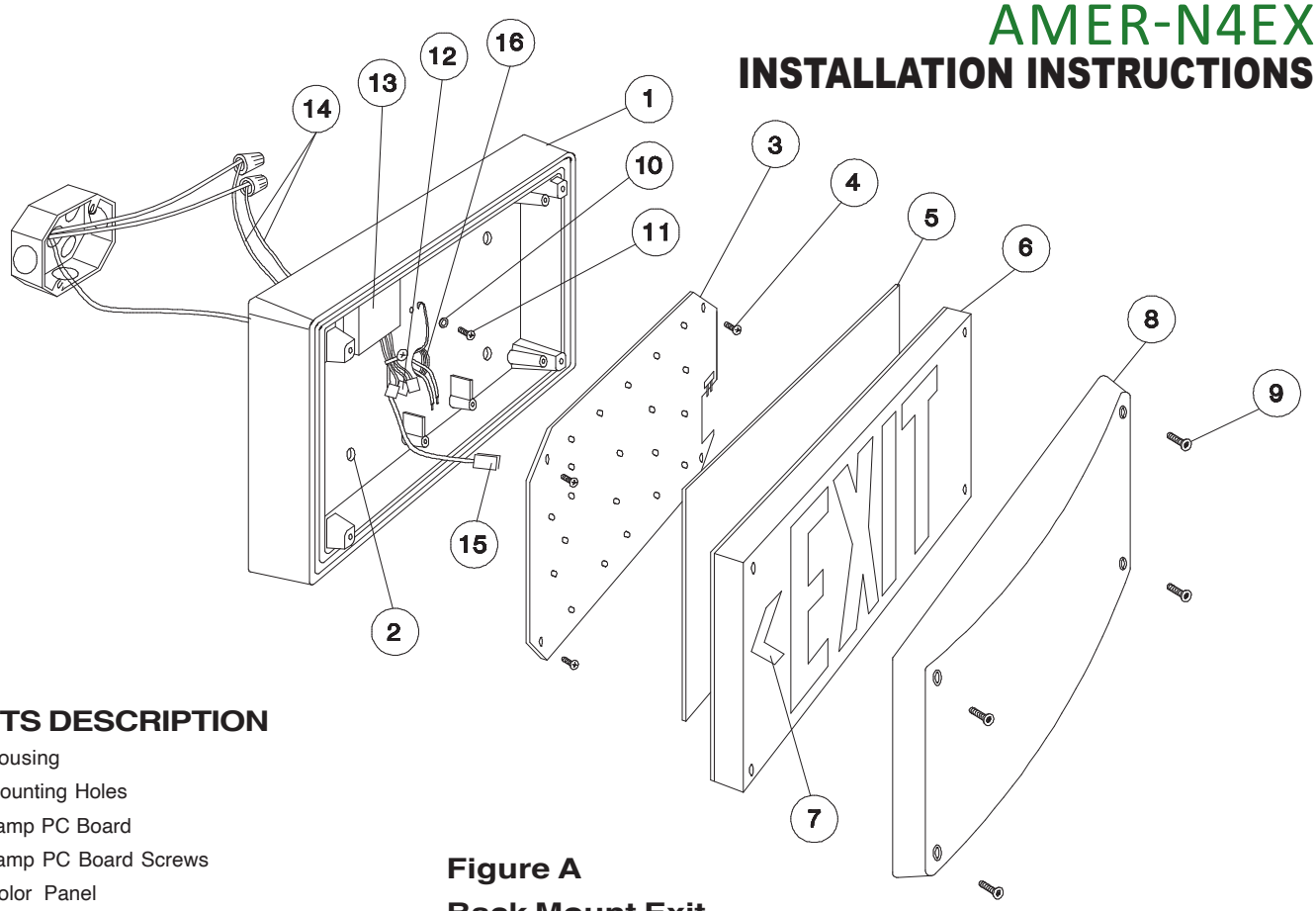

Figure A
Back Mount Exit

PARTS DESCRIPTION

① Housing
② Mounting Holes
③ Lamp PC Board
④ Lamp PC Board Screws
⑤ Color Panel
⑥ Stencil
⑦ Chevron
⑧ Clear Cover
⑨ Cover Screws
⑩ Cup Washer
⑪ Green Ground Screw
⑫ Pushnut Connector
⑬ Power Supply
⑭ Installation Wire Leads
⑮ Lamp Connector
⑯ Wire Entry Hole

INSTALLATION

BACK MOUNT or CONDUIT ENTRY EXIT:

1. Remove cover screws ⑨ to release clear cover ⑧ and stencil ⑥ from housing ①. Remove clear cover ⑧ and stencil ⑥ from housing ①. If exit chevron directional indicators are required, remove stencil color panel ⑤ by bending color panel at center to release from snaps on stencil ⑥. Remove left or right chevron ⑦, as needed for exit orientation. To unsnap chevron ⑦, push at front corner edge.

2. Disconnect lamp connector ⑮ by pulling up gently on connector snap arm to release connector. Remove (4) screws ④ holding lamp pc board ③ in place. Carefully remove lamp pc board ③, and place on a clean, safe surface.

3. Position exit housing ① in desired location on mounting surface, and mark (4) mounting hole ② locations.

4a. ***(Conduit entry only)****:* Select the appropriate conduit entry locations to be used, remove plugs and re-install as required.

4b. Using suppled installation wire leads ⑭, (white and black or orange), and appropriate wiring diagram, make A.C. input connections at j-box.

Note: These leads and ground wire are to be routed thru wire entry hole ⑯ in center of exit housing ① back *before* final anchoring of housing ① to mounting surface.

Important: Housing ① should be attached to mounting surface using suitable fastener for type of wall material. *All (4) mounting hole positions should be used*, and anchors or screws should have a minimum pullout rating of 160 pounds.

5a. ***(Conduit entry only)****:* Pull A.C. input wires and ground wire thru conduit entry hole, and make conduit connection. Make ground connection to housing using green ground screw ⑪ and cup washer ⑩ (provided).

5b. Using appropriate wiring diagram, make supply lead connections to appropriate pushnut connector ⑫ on exit power supply ⑬. Make ground connection using green ground screw ⑪ and cup washer ⑩ (provided). Dress wires into exit, and reassemble the exit (reverse sequence of above).

Cleaning: Clean clear cover ⑧ using any industrial grade plastics cleaner. Do not use ammonia based glass cleaner, or solvent based cleaners on cover as it will damage the clear finish.

AMER-N4EX
INSTALLATION INSTRUCTIONS

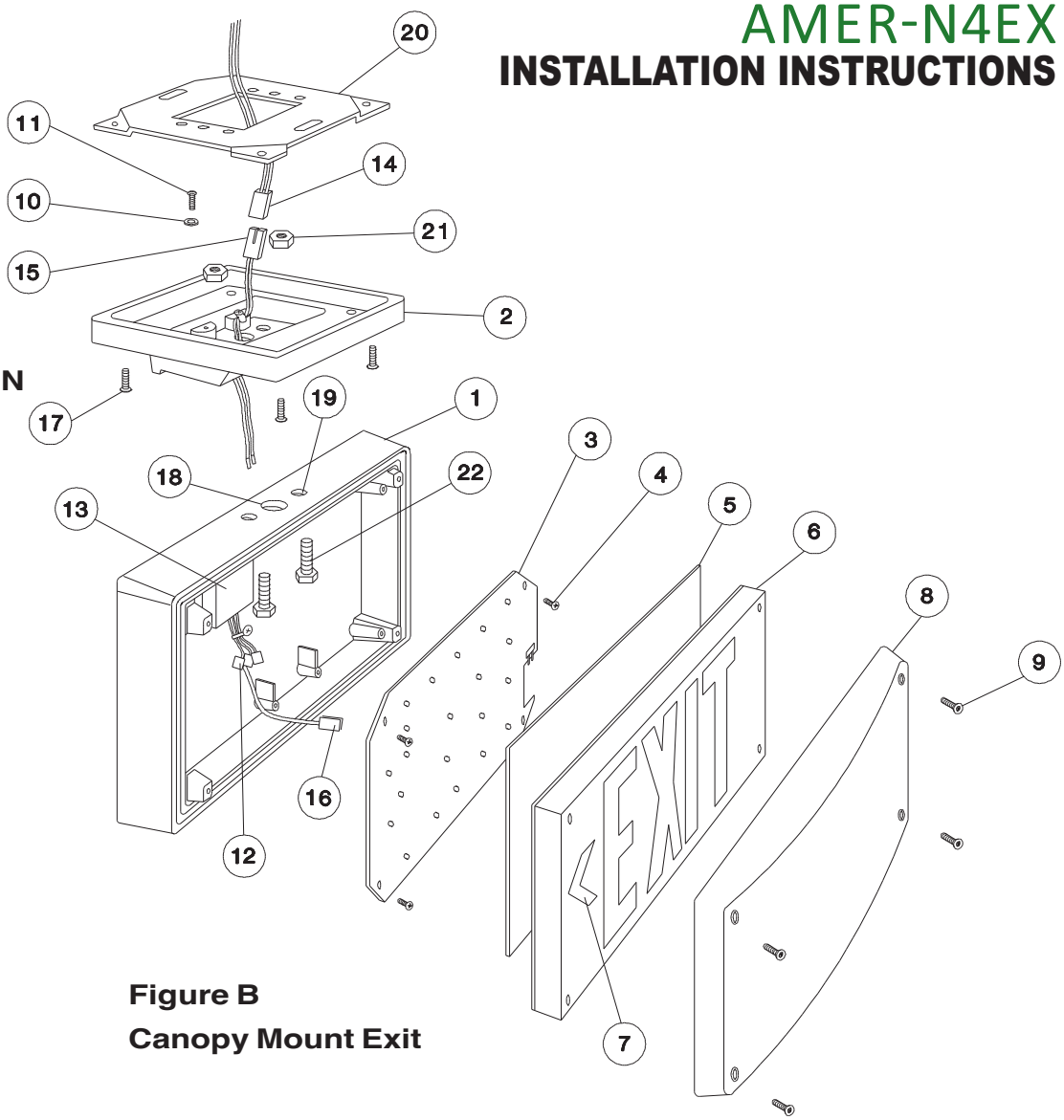

Figure B
Canopy Mount Exit

PARTS DESCRIPTION

① Housing
② Canopy
③ Lamp PC Board
④ Lamp PC Board Screws
⑤ Color Panel
⑥ Stencil
⑦ Chevron
⑧ Clear Cover
⑨ Cover Screws
⑩ Cup Washer
⑪ Green Ground Screw
⑫ Pushnut Connector
⑬ Power Supply
⑭ Power Connector
⑮ Power Connector
⑯ Lamp Connector
⑰ Canopy Mounting Screws
⑱ Wire Thru Hole
⑲ Canopy Bolt Holes
⑳ Canopy Mounting Bracket
㉑ Canopy Bolt
㉒ Canopy Locknut

INSTALLATION

TOP OR SIDE CANOPY MOUNT EXIT:

1. Remove cover screws ⑨ to release clear cover ⑧ and stencil ⑥ from housing. Remove clear cover ⑧ and stencil ⑥ from housing ①. If directional indicators are required, remove stencil color panel ⑤ by bending color panel at center to release from stencil snaps. Remove left or right chevron ⑦ as needed for exit orientation. To unsnap chevron, push at corner front edge.

2. Disconnect lamp connector ⑯ by pulling up gently on connector snap arm to release connector. Remove (4) screws holding lamp pc board ③ in place. Carefully remove lamp pc board ③, and place on a clean, safe surface.

3. Route canopy installation supply leads thru wire entry hole ⑱, and attach canopy to housing using supplied (2) 1/4-20 bolts ㉑ and locknuts ㉒.

4. Unsnap power connector ⑭ ⑮ and make connections to A.C. supply (white and black or orange), at j-box.

5. Position canopy mounting bracket ⑳ over j-box and mark anchor locations (at four slots).

Important: Canopy mounting bracket ⑳ should be attached to mounting surface using suitable fastener for type of wall material. *All (4) mounting hole positions should be used*, and anchors or screws should have a minimum pullout rating of 160 pounds.

6. Using appropriate wiring diagram, make supply lead connections to appropriate pushnut connector ⑫ on exit power supply ⑬. **Important Note: The side mount housing may be rotated 180 degrees to reverse mounting side from left to right.** Dress wires into exit, and re-assemble the exit (reverse sequence of above).

7. Make ground connection at canopy using green ground screw ⑪ and cup washer ⑩ (provided). Connect power connector ⑭ ⑮, and any additional option connectors and dress the wires and connectors into the j-box. Mount the exit by attaching the canopy ② to the canopy mounting bracket ⑳ with (4) tamper-proof screws ⑰ (provided).

Cleaning: Clean clear cover ⑧ using any industrial grade plastics cleaner. Do not use ammonia based glass cleaner, or solvent based cleaners on cover as it will damage the clear finish.

Wiring Diagrams and Instructions

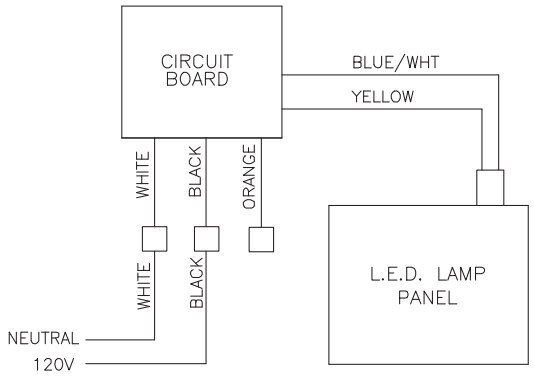

Single Lamp 120 volt wiring

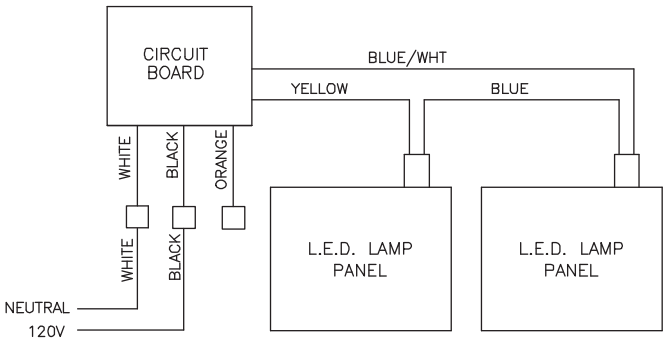

Dual Lamp 120 volt wiring

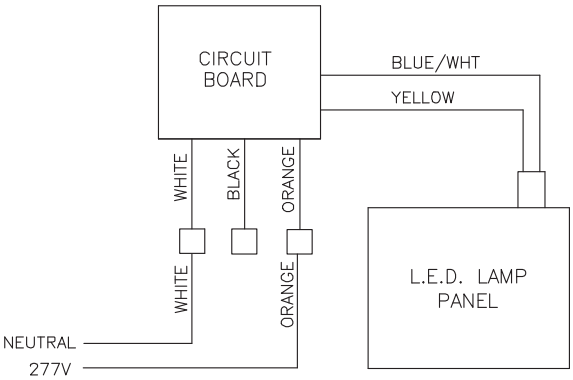

Single Lamp 277 volt wiring

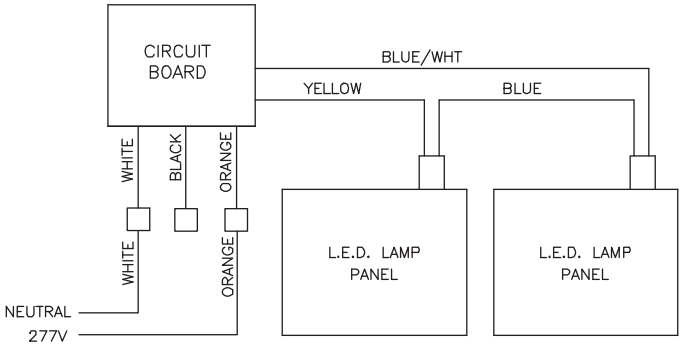

Dual Lamp 277 volt wiring

Wiring Notes:

1. **Cap all unused leads separately.**