AMER-N4EX SERIES
EXIT SIGN INSTALLATION INSTRUCTIONS - BATTERY BACKUP MODEL

CAUTION: For safety and proper operation, read and follow instructions carefully before installation.

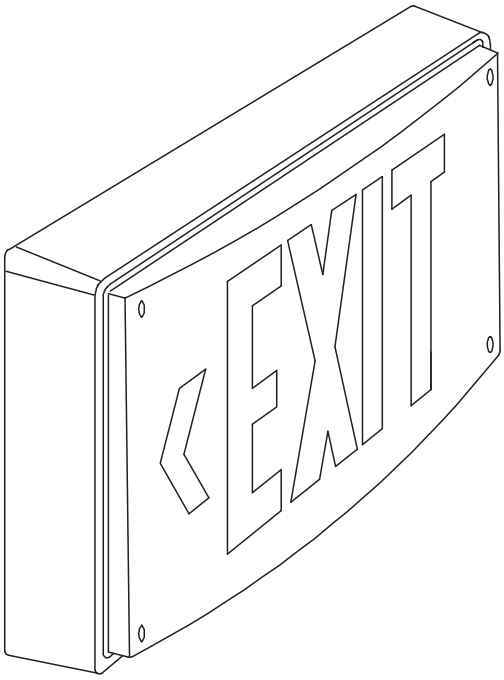

IMPORTANT SAFEGUARDS

1.READ AND FOLLOW ALL SAFETY INSTRUCTIONS

2. Before wiring to power supply, turn off electricity at fuse or circuit breaker.
3. Disconnect A.C. power and Power Plug before servicing.
4. Refer to wiring diagram sheet for proper connections.
5. Be sure unit is wired to AC power before power plug is connected.
6. All servicing should be performed by qualified personnel.
7. Consult your local building code for approved wiring and installation.
8. Do not use outdoors.
9. Do not mount near gas or electric heater.
10. Fixture must be grounded to avoid potential electric shock.
11. Equipment should be mounted in location and at heights where it will not readily be subjected to tampering by unauthorized personnel.
12. The use of accessory equipment not recommended by the manufacturer may cause an unsafe condition.
13. Do not use this equipment for other than intended use.

SAVE THESE INSTRUCTIONS

AMER-N4EX
INSTALLATION INSTRUCTIONS

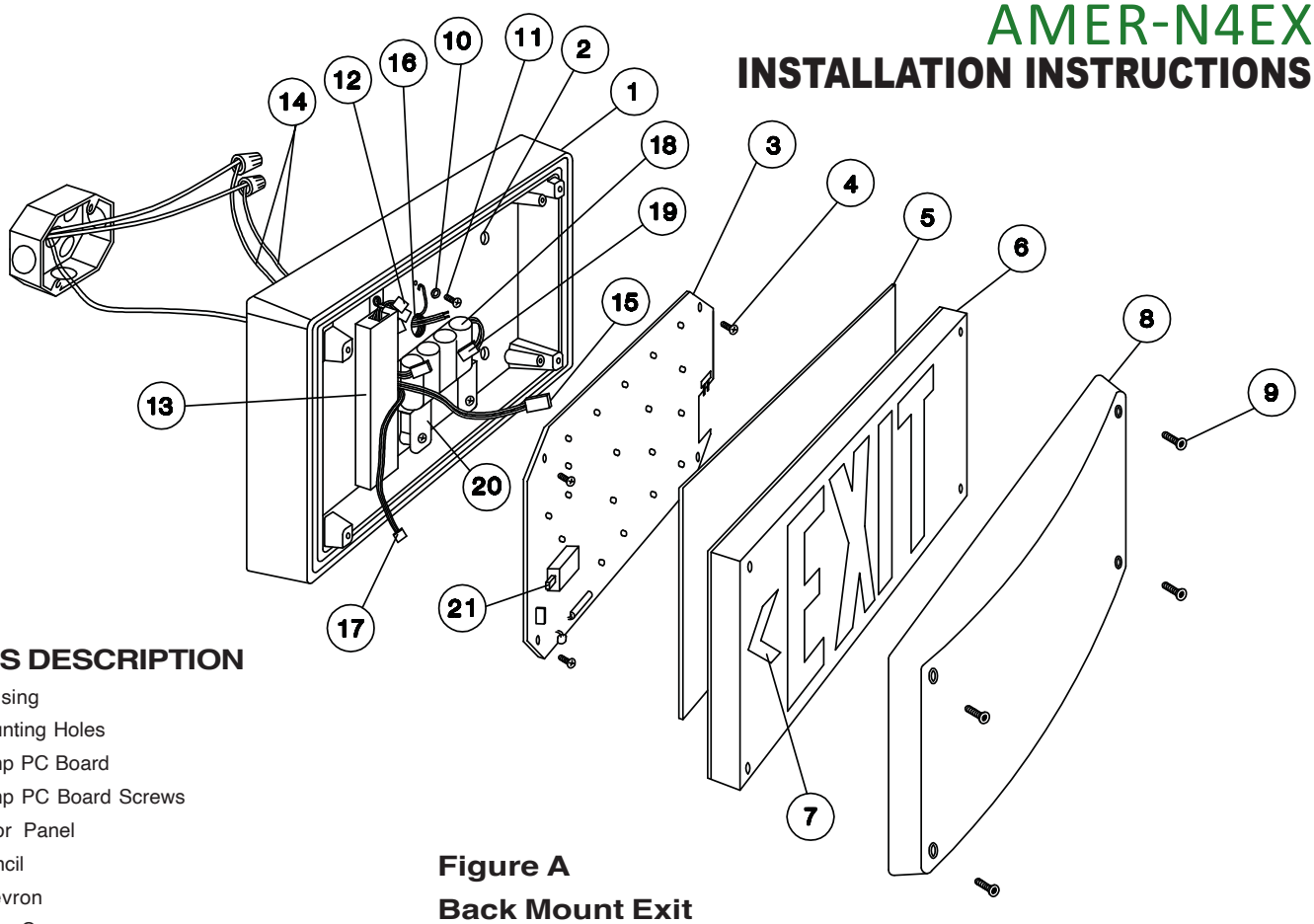

Figure A
Back Mount Exit

PARTS DESCRIPTION

① Housing
② Mounting Holes
③ Lamp PC Board
④ Lamp PC Board Screws
⑤ Color Panel
⑥ Stencil
⑦ Chevron
⑧ Clear Cover
⑨ Cover Screws
⑩ Cup Washer
⑪ Green Ground Screw
⑫ Pushnut Connector
⑬ Charger PC Board
⑭ Installation Wire Leads
⑮ Lamp Connector
⑯ Wire Entry Hole
⑰ Test Switch/Pilot Light Harness
⑱ Battery
⑲ Battery Connector
⑳ Battery Bracket
㉑ Manual Test Switch

INSTALLATION

BACK MOUNT or CONDUIT ENTRY EXIT:

1. Remove cover screws ⑨ to release clear cover ⑧ and stencil ⑥ from housing ①. Remove clear cover ⑧ and stencil ⑥ from housing ①. If exit chevron directional indicators are required, remove stencil color panel ⑤ by bending color panel at center to release from snaps on stencil ⑥. Remove left or right chevron ⑦, as needed for exit orientation. To unsnap chevron ⑦, push at front corner edge.

2. Disconnect Test Switch/Pilot Light ⑰. Disconnect lamp connector ⑮ by pulling up gently on connector snap arm to release connector. Remove (4) screws ④ holding lamp pc board ③ in place. Carefully remove lamp pc board ③, and place on a clean, safe surface.

3. Position exit housing ① in desired location on mounting surface, and mark (4) mounting hole ② locations.

4a. ***(Conduit entry only)****:* Select the appropriate conduit entry locations to be used, remove plugs and reinstall as required.

Note: Refer to **Wiring Diagrams and Instructions**, page 4, before proceeding with wiring.

4b. Using supplied installation wire leads ⑭, (white and black or orange), and appropriate wiring diagram, make A.C. input connections at j-box.

Note: These leads and ground lead are to be routed thru wire entry hole ⑯ in center of exit housing ① back *before* final anchoring of housing ① to mounting surface.

Important: Housing ① should be attached to mounting surface using suitable fastener for type of wall material. *All (4) mounting hole positions should be used*, and anchors or screws should have a minimum pullout rating of 160 pounds.

5a. ***(Conduit entry only)****:* Pull A.C. input wires and ground lead thru conduit entry holes, and make conduit connections.

5. Using appropriate wiring diagram, make installation supply lead ⑭ connections to appropriate pushnut connector ⑫ on exit charger pc board ⑬. Make ground connection to housing using green ground screw ⑪ and cup washer ⑩.

6. Connect battery connector ⑲ ,dress wires into exit, and re-assemble the exit (reverse sequence of above).

7. Refer to **Inspection and Maintenance**, page 4.

Cleaning: Clean clear cover ⑧ using any industrial grade plastics cleaner. Do not use ammonia based glass cleaner, or solvent based cleaners on cover as it will damage the clear finish.

PARTS DESCRIPTION

① Housing
② Canopy
③ Lamp PC Board
④ Lamp PC Board Screws
⑤ Color Panel
⑥ Stencil
⑦ Chevron
⑧ Clear Cover
⑨ Cover Screws
⑩ Cup Washer
⑪ Green Ground Screw
⑫ Pushnut Connector
⑬ Charger PC Board
⑭ Power Connector
⑮ Power Connector
⑯ Lamp Connector
⑰ Test Switch/Pilot Light Harness
⑱ Wire Thru Hole
⑲ Canopy Bolt Holes
⑳ Canopy Mounting Bracket
㉑ Canopy Bolt
㉒ Canopy Nut
㉓ Battery
㉔ Battery Connector
㉕ Battery Bracket
㉖ Canopy Mounting Screw
㉗ Manual Test Switch

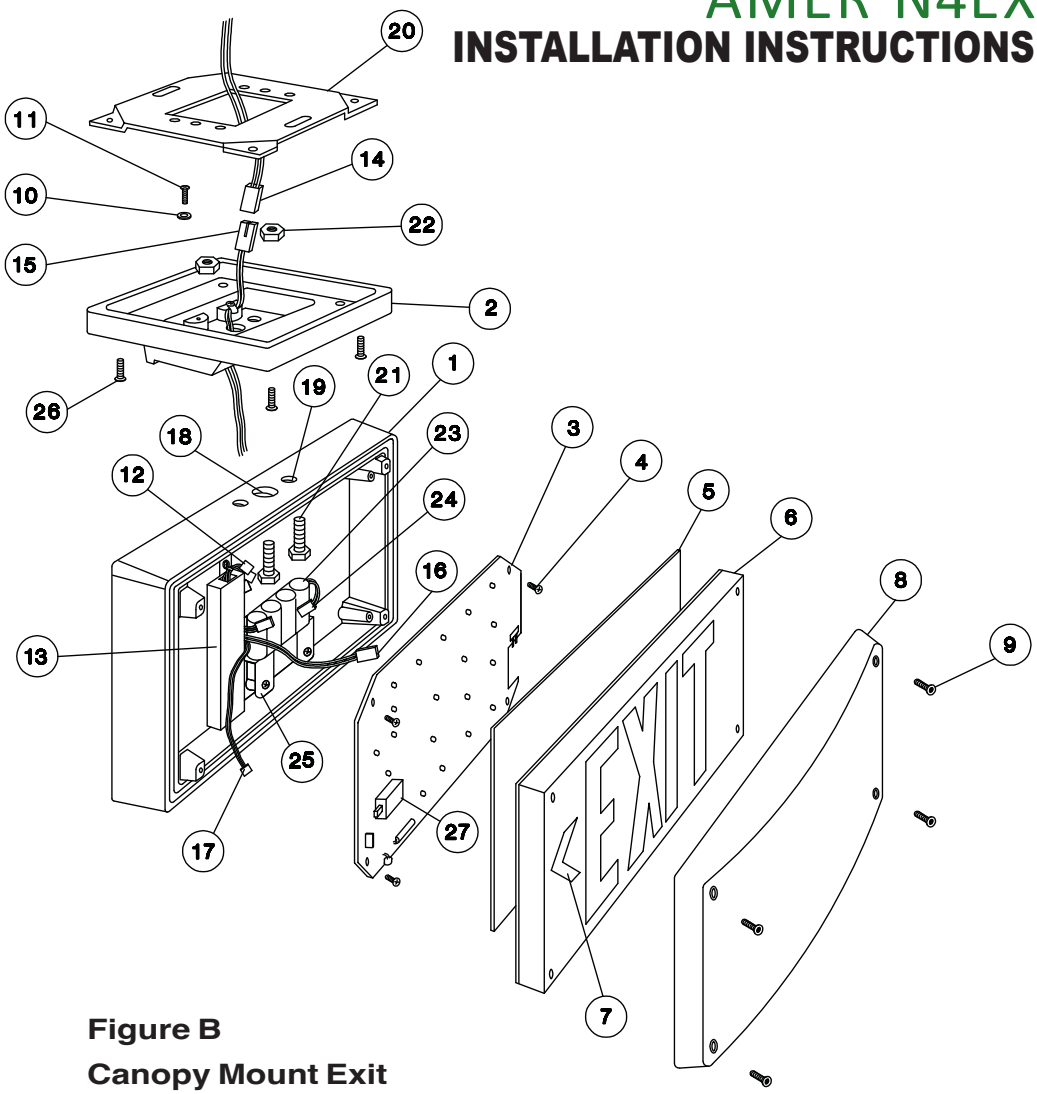

Figure B
Canopy Mount Exit

INSTALLATION

TOP OR SIDE CANOPY MOUNT EXIT:

1. Remove cover screws ⑨ to release clear cover ⑧ and stencil ⑥ from housing. Remove clear cover ⑧ and stencil ⑥ from housing ①. If directional indicators are required, remove stencil color panel ⑤ by bending color panel at center to release from stencil snaps. Remove left or right chevron ⑦ as needed for exit orientation. To unsnap chevron, push at corner front edge.

2. Disconnect test switch/pilot light connector ⑰. Disconnect lamp connector ⑯ by pulling up gently on connector snap arm to release connector. Remove (4) screws holding lamp pc board ③ in place. Carefully remove lamp pc board ③, and place on a clean, safe surface.

3. Route canopy installation supply leads and ground lead thru wire entry hole ⑱, and attach canopy to housing using supplied (2) 1/4-20 bolts ㉑ and locknuts ㉒.

Note: Refer to **Wiring Diagrams and Instructions**, page 4, before proceeding with wiring.

4. Unsnap power connector ⑭ ⑮ and make installation supply lead ⑭ connections to AC supply at j-box.

5. Position canopy mounting bracket ⑳ over j-box and mark anchor locations (at four slots).

Important: Canopy mounting bracket ⑳ should be attached to mounting surface using suitable fastener for type of wall material. *All (4) mounting hole positions should be used*, and anchors or screws should have a minimum pullout rating of 160 pounds.

6. Using appropriate wiring diagram, make installation supply lead ⑭ connections to appropriate pushnut connector ⑫ on exit charger pc board ⑬.

Important Note: The Side Mount housing may be rotated 180 degrees to reverse mounting side from left to right.

7. Connect battery connector ㉔. Dress wires into exit, and re-assemble the exit (reverse sequence of above)

8. Connect power connector ⑭ ⑮, and any additional option connectors (at canopy ②) and make ground connection to inside of canopy using green ground screw ⑪ and cup washer ⑩. Dress the wires and connectors into the j-box, and mount the exit by attaching the canopy ② to the canopy mounting bracket ⑳ with (4) tamper-proof screws ㉖ (provided).

9. Refer to **Inspection and Maintenance**, page 4.

Cleaning: Clean clear cover ⑧ using any industrial grade plastics cleaner. Do not use ammonia based glass cleaner, or solvent based cleaners on cover as it will damage the clear finish.

AMER-N4EX
INSTALLATION INSTRUCTIONS

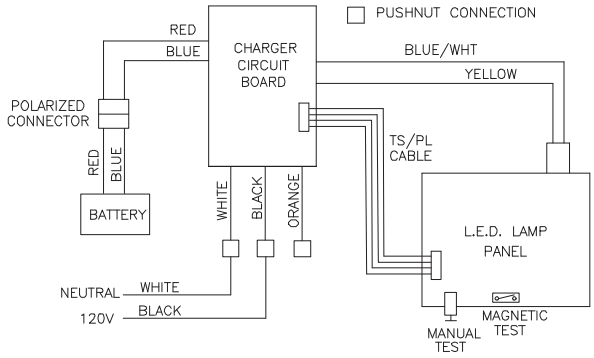

Single Lamp 120 volt wiring

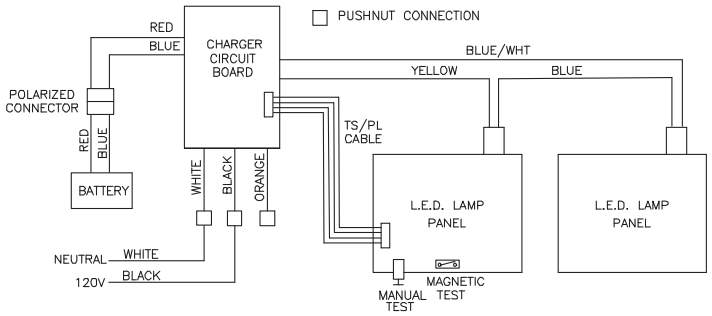

Dual Lamp 120 volt wiring

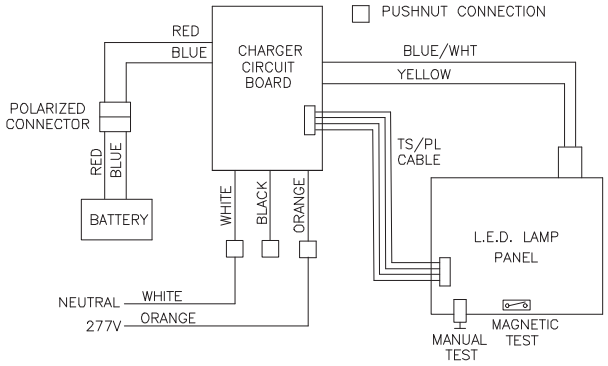

Single Lamp 277 volt wiring

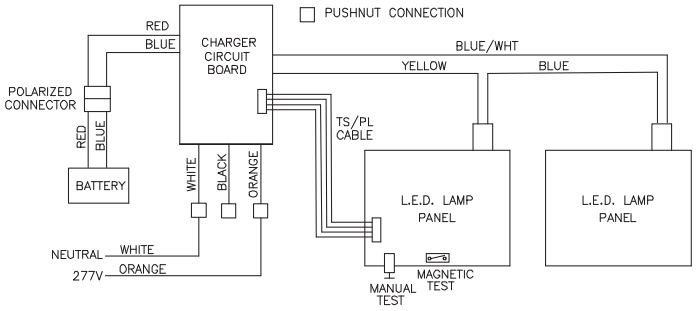

Dual Lamp 277 volt wiring

Wiring

1. This equipment to be connected to an unswitched circuit only.
2. Cap all unused leads separately.
3. Canopy mount exits have polarized connectors on A.C. installation wire leads and option installation wire leads.
4. For exits with F option or X2 option, refer to Installation Instructions Supplement sheet for wiring diagrams and additional instructions.
5. **CAUTION:** Damage to battery will occur if battery connector is connected to charger board for a prolonged period of time without continuous A.C. power provided.

Inspection and Maintenance

Important Note: Emergency lighting systems should be tested as often as local codes require, or at least monthly, to acertain that all components are operational. Allow battery to charge 24 hours before initial testing, and 168 hours to fully charge battery.

1. **Normal Operation:** When unit is functioning properly, with A.C. power supplied, the "Ready" light and exit lamp will be on.

2. **To Test:** Apply magnet to test position indicated by "test" label, or initiate manual test switch. "Ready" light will turn off and exit lamp will remain on in D.C. mode.

Note: Turn off A.C. power and disconnect battery before servicing unit.

Battery Replacement

1. Pry battery from battery bracket to release from tape. Replace reverse sequence of above.

Charger P.C. Board Replacement:

1. Disconnect battery connector, lamp connector, and test switch/pilot light connector.
2. Cut installation supply leads at pushnut connector, and strip installation supply leads for pushnut connection.
3. Remove screw holding charger pc board, and remove from unit.
4. To replace with new charger pc board reverse sequence of above.

SINGLE SIDED INTERNAL HEATER OPTION INSTRUCTIONS

CAUTION: For safety and proper operation, read and follow instructions carefully before installation.

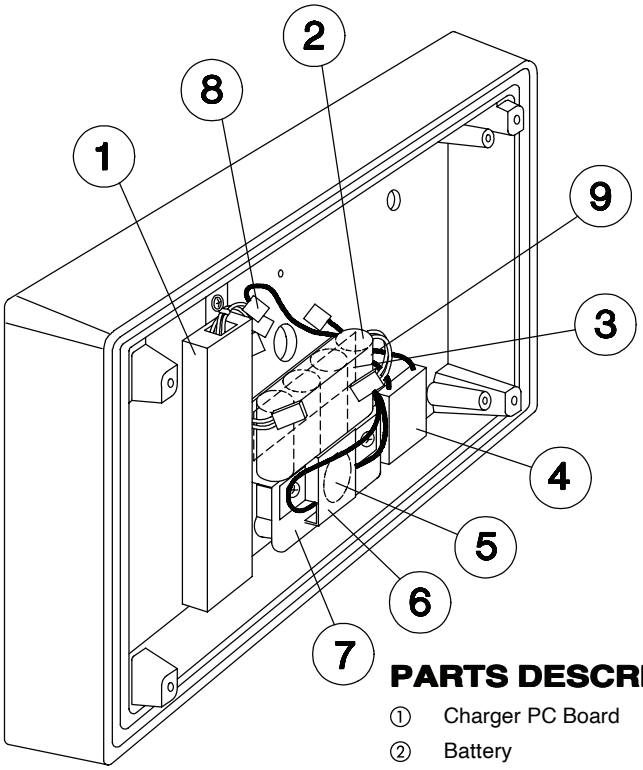

PARTS DESCRIPTION

① Charger PC Board
② Battery
③ Battery Heater
④ Heater Capacitor
⑤ Thermostat
⑥ Thermostat Cover
⑦ Battery Bracket
⑧ Pushnut Connector
⑨ Battery Insulator

IMPORTANT SAFEGUARDS

1. READ AND FOLLOW ALL SAFETY INSTRUCTIONS
2. Before wiring to power supply, turn off electricity at fuse or circuit breaker.
3. Disconnect A.C. power before servicing.
4. All servicing should be performed by qualified personnel.
5. Consult your local building code for approved wiring and installation.
6. Do not mount near gas or electric heater.
7. Fixture must be grounded to avoid potential electric shock.
8. Equipment should be mounted in location and at heights where it will not readily be subjected to tampering by unauthorized personnel.
9. The use of accessory equipment not recommended by the manufacturer may cause an unsafe condition.
10. Do not use this equipment for other than intended use.

SAVE THESE INSTRUCTIONS

INSTALLATION

1. Refer to main installation manual for all mounting and additional instructions.

2. Select the appropriate wiring diagram for the correct input voltage. **Important Note:** When wiring for 120V operation, the supplied black jumper wire must be used.

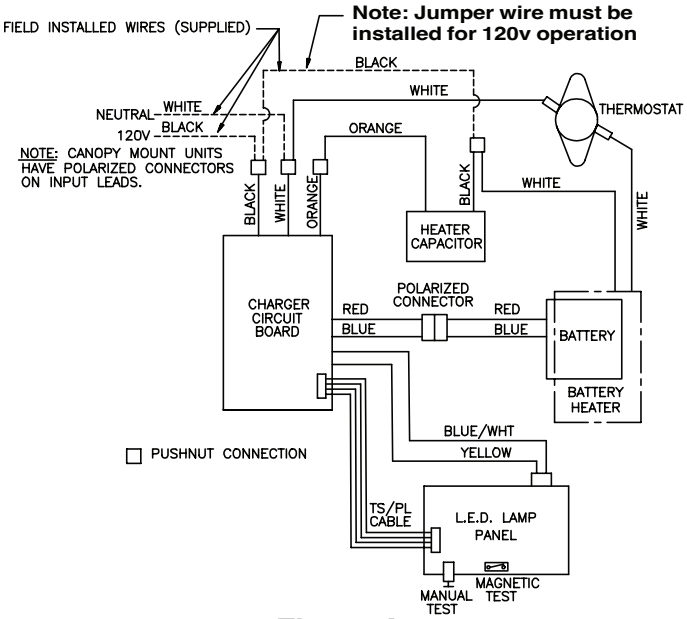

Figure A
120V Single Lamp

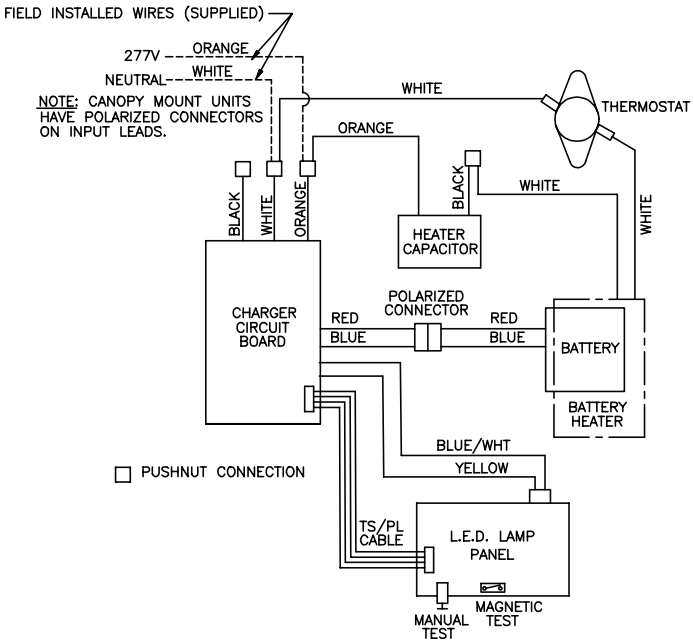

Figure B
277V Single Lamp

AMER-N4EX

DOUBLE SIDED INTERNAL HEATER OPTION INSTRUCTIONS

CAUTION: For safety and proper operation, read and follow instructions carefully before installation.

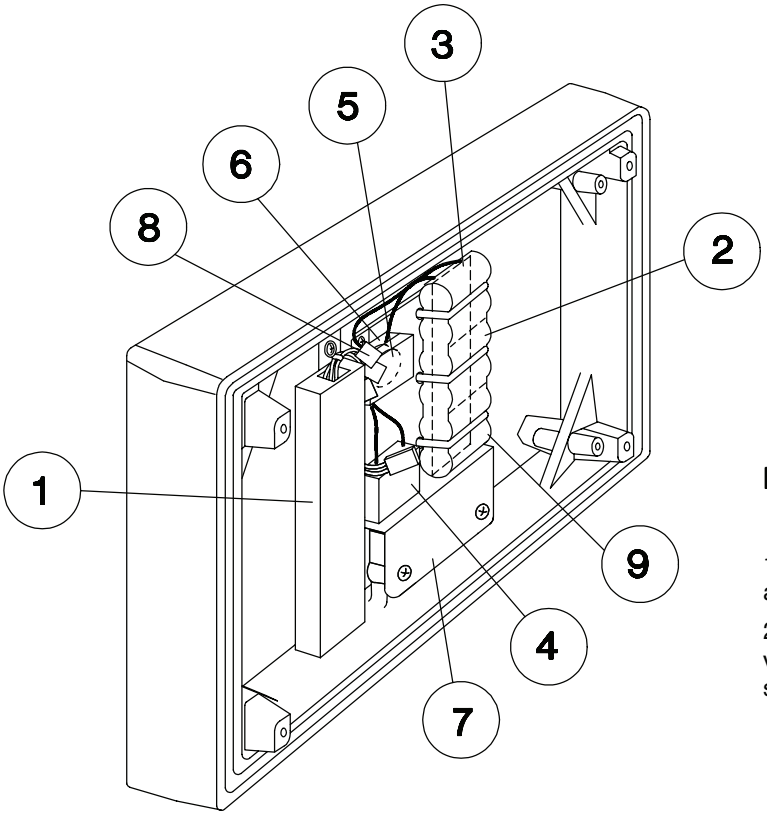

PARTS DESCRIPTION

① Charger PC Board
② Battery
③ Battery Heater
④ Heater Capacitor
⑤ Thermostat
⑥ Thermostat Cover
⑦ Battery Bracket
⑧ Pushnut Connector
⑨ Battery Insulator

INSTALLATION

1. Refer to main installation manual for all mounting and additional instructions.

2. Select the appropriate wiring diagram for the correct input voltage. **Important Note:** When wiring for 120V operation, the supplied black jumper wire must be used.

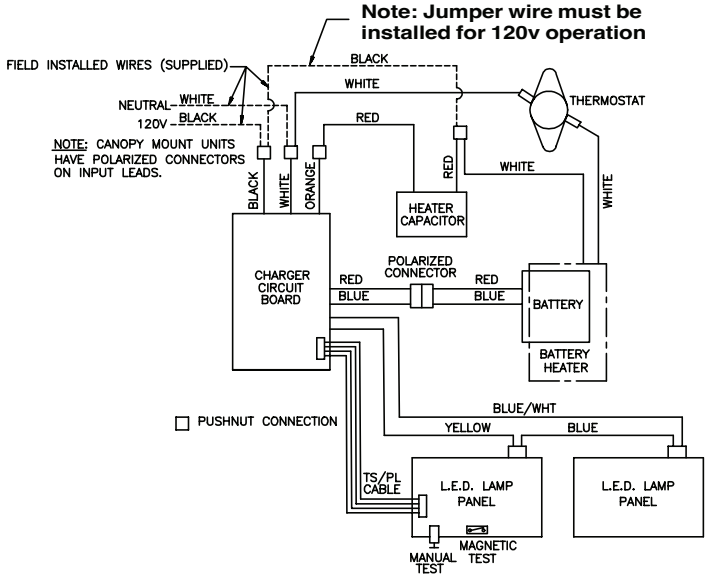

Figure C
120V Dual Lamp

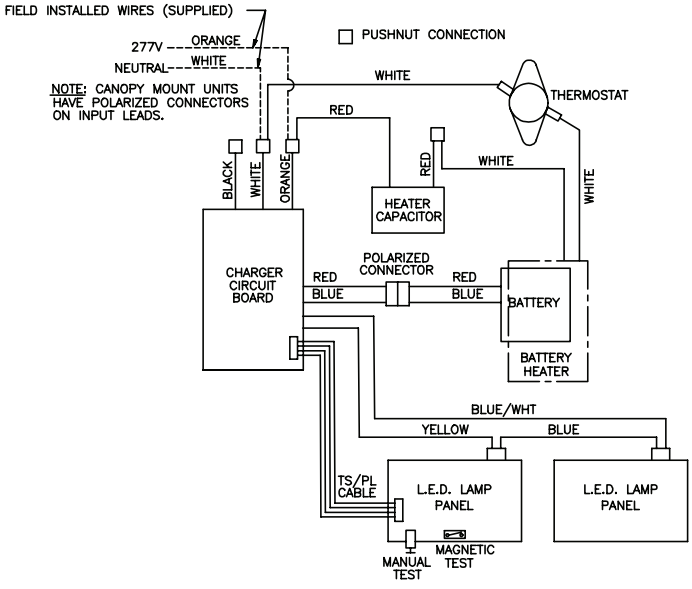

Figure D
277V Dual Lamp